Randomized Digital Optimal Control (RDOC)

Digital Control systems

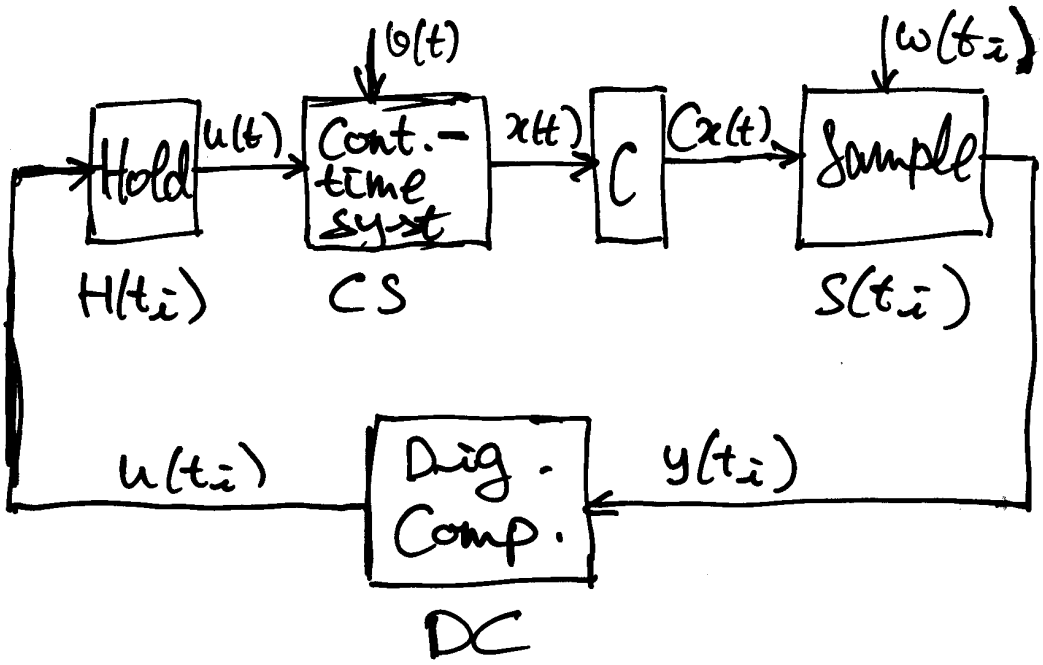

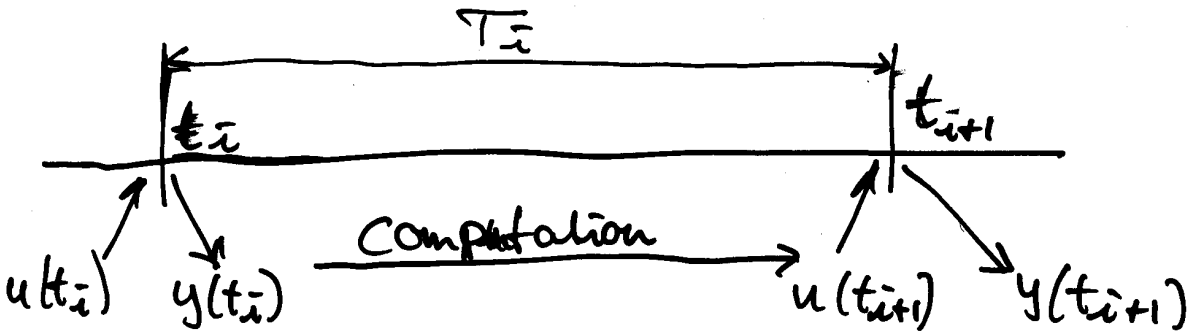

- Sampling
  - det. (t_i known)
    - periodic ($t_i = iT$)
    - nonperiodic ($T_{i+1} \neq T_i$)
  - stoch. ($P(T_i)$ known)
    - periodic ($t_{i+1} = iT + T_i$)
    - additive ($t_{i+1} = t_i + T_i$)

In interval $[t_i, t_{i+1}]$

- Non-intent. (t_{i+1} not known)
- Intent. (t_{i+1} known)

- Non-intent. (t_{i+1} not known)
- Intent. (t_{i+1} known)

Digital Optimal Control Problem

Digital systems (DS):

CS: $\dot{x}(t) = Ax(t) + Bu(t) + v(t), \quad t \geq 0$

H: $u(t) = u(t_i), \quad t_i \leq t < t_{i+1}, \quad i = 0, 1, \ldots$

S: $y(t_i) = Cx(t_i) + w(t_i), \quad i = 0, 1, \ldots$

$x(t) \in R^n$

$u(t) \in R^m$

$y(t_i) \in R^l$

$v(t) \in R^n$

$w(t_i) \in R^l$

A, B, C real matrices of appropriate dimensions.

A, B, C <u>known</u>

$x(t_0) = x_0$, $\{v(t)\}$, $\{w(t_i)\}$ independent with

$E\{x_0\} = \bar{x}_0$, $\mathrm{cov}(x_0) = G$

$E\{v(t)\} = 0$, $\mathrm{cov}(v(t)) = V\delta(t-s)$

$E\{w(t_i)\} = 0$, $\mathrm{cov}(w(t_i)) = W\delta_{ij}$

G, V, W real symmetric and ≥ 0.

$\bar{x}_0, G, V, W$ <u>known</u>

<u>Continuous-time criterion</u> (CC):

$$\sigma_{cs}(U_s) = \lim_{t_f \to \infty} \frac{1}{t_f - t_0} \int_{t_0}^{t_f} E\{x^T(t) Q x(t) + u^T(t) R u(t)\} dt$$

Q, R real symmetric and ≥ 0.
Q, R <u>known</u>.
$U(t_i) \triangleq \{u(t_0), \cdots, u(t_i)\}$

Sampling:
$T_i = t_{i+1} - t_i, \quad i = 0, 1, \cdots$
$\{T_i\}$ a sequence of indep. identical distributed (IID) stoch. variables indep. of x_0, $\{v(t)\}$, $\{w(t_i)\}$.
$p(T_i)$ known
$0 < \alpha \leq T_i \leq \beta < \infty, \; i = 0, 1, \cdots, \; \alpha, \beta$ pos. real scalars.

<u>Dig. Opt. Contr. Probl.</u> (DOCP)
$Y_i \triangleq \{y(t_0), \cdots, y(t_i)\}$
$u(t_i) = \phi(Y_{i-1}, U_{i-1}), \; i = 0, 1, \cdots, \; \phi$ det.
Given DS and CC, find $U_{cs}^* = \{u^*(t_0), u^*(t_1), \cdots\}$ which minimizes $\sigma_{cs}(U_{cs})$ and find the min. val. σ_{cs}^*.

Equivalent Discr.-time Opt. Contr. Probl.

$t_i \to \infty \iff i \to \infty$

$x_i \triangleq x(t_i)$, $u_i \triangleq u(t_i)$, $y_i \triangleq y(t_i)$

$p(s_i)$ indep. of i, then $\bar{s}_i$ denoted by $\bar{s}$.

Equivalent Discr.-time Syst. (EDS):

$$x_{i+1} = \Phi_i x_i + \Gamma_i u_i + v_i, \quad i = 0, 1, \ldots$$

$$y_i = C x_i + w_i, \quad i = 0, 1, \ldots$$

$$\Phi_i = \Phi(T_i) = e^{AT_i}$$

$$\Gamma_i = \Gamma(T_i) = \int^{T_i} \Phi(s) B \, ds$$

$$V_i = V(T_i) = \int_0^{T_i} \Phi(s) V \Phi^T(s) \, ds$$

x_0, $\{v_i\}$, $\{w_i\}$ indep. with

$$E\{x_0\} = \bar{x}_0, \quad \mathrm{cov}(x_0) = G$$

$$E\{v_i\} = 0, \quad \mathrm{cov}(v_i) = V \delta_{ij}$$

$$E\{w_i\} = 0, \quad \mathrm{cov}(w_i) = W \delta_{ij}$$

$\{\Phi_i\}$, $\{\Gamma_i\}$, $\{v_i\}$ seq's of indep. Rand. matr's and vectors with const. stat's, indep. of $\{w_i\}$ and x_0.

Φ_i, Γ_i indep. of v_j, $i \neq j$, and uncorrel. with v_i.

$\bar{V} = E\{V_i\}, \quad \bar{V} \geq 0$
$\bar{V}, p(\Phi_i), p(T_i)$ known

(Asymptotic) behaviour of the DS at the sampling instants is identical to the (asymptotic) behaviour of the EDS.

<u>Equivalent Discr.-time Criterion</u> (EDC):

$$\sigma_{\infty}(u_{\infty}) = \frac{1}{\bar{T}} \lim_{M \to \infty} \frac{1}{M} E\left\{\sum_{i=0}^{M-1} x_i \bar{Q} x_i + 2 x_i^T \bar{M} u_i + u_i^T \bar{R} u_i\right\} + \frac{1}{\bar{T}} \bar{\gamma}$$

$$Q_i = Q(T_i) = \int_0^{T_i} \Phi^T(s) Q \Phi(s)\, ds$$
$$M_i = M(T_i) = \int_0^{T_i} \Phi^T(s) Q \Gamma(s)\, ds$$
$$R_i = R(T_i) = \int_0^{T_i} [R + \Gamma^T(s) Q \Gamma(s)]\, ds$$
$$\gamma_i = \gamma(T_i) = \int_0^{T_i} \mathrm{tr}[V(s) Q]\, ds$$

$\bar{Q}, \bar{R}, \bar{\gamma} \geq 0$
$\bar{Q}, \bar{M}, \bar{R}, \bar{\gamma}$ <u>known</u>

$u_i = \phi(Y_{i-1}, U_{i-1})$, ϕ det.
Value of CC = Value of EDC.

Using Lebesgue dom.-conv. th.: $E \longleftrightarrow \lim$
strong law of large numb's: $\frac{1}{M}\sum_{i=0}^{M-1} T_i \xrightarrow[M\to\infty]{a.s.} \bar{T}$

<u>Equivalent Discr.-time Opt. Contr. Probl.</u> (EDOCP):

$u_i = \phi(Y_{i-1}, U_{i-1}), \quad i = 0, 1, \ldots$

Given EDS, EDC,
Find $U_{cs}^* = \{u_0^*, u_1^*, \ldots\}$ which minimizes $\sigma_{cs}(U_{cs})$ and find the min. val. σ_{cs}^*.

Solution DOCP $\equiv$ Solution EDOCP.

System Theory

$x_{i+1} = \Phi_i x_i, \quad i = 0, 1, \ldots \qquad (\Phi_i)$

$\Phi_i \in R^{n \times n}$

$\{\Phi_i\}$ seq. of indep. rand. matr's with const. stat's

x_0 det.

<u>ms</u>: mean square.

(Φ_i) <u>ms-stable</u> if $\overline{\|x_i\|^2} \to 0$ as $i \to \infty$, $\forall x_0$.

$x_{i+1} = \Phi_i x_i + \Gamma_i u_i, \quad i = 0, 1, \ldots \qquad (\Phi_i, \Gamma_i)$

$\{\Phi_i\}, \{\Gamma_i\}$ seq's of indep. rand. matr's with const. statistics.

x_0 det.

Suppose $u_i = -L x_i$, L real matr.

$x_{i+1} = (\Phi_i - \Gamma_i L) x_i, \quad i = 0, 1, \ldots$

(Φ_i, Γ_i) <u>ms-stabilizable</u> if $\exists L \ni (\Phi_i - \Gamma_i L)$ ms-stable.

$x_{i+1} = \Phi_i x_i, \quad y_i = C_i x_i, \quad i = 0, 1, \ldots \qquad (\Phi_i, C_i)$

$\{\Phi_i\}, \{C_i\}$ seq's of indep. rand. matr's with const. stat's.

x_0 det.

(Φ_i, C_i) <u>ms-detectability</u> if $\overline{\|y_i\|^2} = 0, i = 0, 1, \ldots \Rightarrow \overline{\|x_i\|^2} \to 0$ as $i \to \infty$.

There are explic. cond's for ms-stab'y and ms-det'y which are easy to calculate.

(Φ_i) ms-stable $\Longrightarrow$ (Φ_i, Γ_i) ms-stabilizable.
(Φ_i, C_i) ms-detectable

Φ_i, Γ_i, C_i det. and constant $\Rightarrow$

ms-stability $\equiv$ stability
ms-stabilizability $=$ stabilizability

in the usual sense.

Solution eq. discr.-time opt. contr. probl.

S^n: lin. sp. of real symm. $n \times n$ matr's.

Generalized discr.-time Ric. transf. $B_f : S^n \to S$

$$B_f X = \overline{\Phi^T X \Phi} + \bar{Q} - L_X^T \left(\overline{\Gamma^T X \Gamma} + \bar{R}\right) L_X, \quad X \in S^n$$

$$L_X = \left(\overline{\Gamma^T X \Gamma} + \bar{R}\right)^{-1} \left(\overline{\Gamma^T X \Phi} + \bar{M}^T\right), \quad X \in S^n.$$

$$\Phi_i' = \Phi_i - \Gamma_i \bar{R} \bar{M}^T$$

$$\bar{Q}' = \bar{Q} - \bar{M} \bar{R}^{-1} \bar{M}^T$$

$\hat{x}_i$: min. error var. opt. estimator of x_i given Y_{i-1} and U_{i-1}. Error variance is $E\{(x_i - \hat{x}_i)^T (x_i - \hat{x}_i)\}$

$P_i = E\{(x_i - \hat{x}_i)(x_i - \hat{x}_i)^T\}$ is the estimator error covariance.

$\hat{x}_i$ is a det. funct. of Y_{i-1} and U_{i-1}.

An arbitrary, not nec. opt., estimator $\hat{x}'$ is <u>variance neutral</u> if P_i' is not a function of U_{i-1}.

Solution EDOCP

$\bar{R} > 0$

$\hat{x}_i$ var neutral $i = 0, 1, \ldots$

$P = \lim_{i \to \infty} \frac{1}{i} \sum_{k=0}^{i-1} P_k$ exists

(Φ_i', Γ_i) ms-stab'e, $(\Phi_i', \bar{Q}^{1/2})$ ms det'e $\Rightarrow$

$S = \lim_{i \to \infty} B_*^i \Theta$ exists

S is the unique nonneg. def. sol. of $S = B_* S$.

$U_i^* = \{-L_S \hat{x}_0, -L_S \hat{x}_1, \ldots\}$

$(\Phi_i - \Gamma_i L_S)$ is ms-stable

$\Theta_S^* = \frac{1}{T} \operatorname{tr} \left[\bar{V} S + (\overline{\Phi^T S \Phi} + \bar{Q} - S) P \right] + \frac{1}{T} \bar{J}$

U_i^* is a det. funct. of $\hat{x}_i$ –

$\hat{x}_i$, $i = 0, 1, \ldots$, var. neutral $\Rightarrow$ EDOCP separable.

Stability of total syst. depends also on the stability of the estimator.

Now suppose $\mathrm{var}(T_i)=0$, and the opt. LQG gain is L^D, and the opt-estimator is $\hat{x}_i^D$.

<u>Eq. discr.-time subopt. contr. prob.</u> (EDSOCP):

$u_i = -L^D \hat{x}_i^D, \quad i = 0, 1, \ldots$

Find the min. val. $\sigma_{cs}^{L^D}$.

Define

$B_{L^D} : S^n \to S^n \quad (B_* \text{ with } L^D)$:

$$B_{L^D} X = \overline{\Phi^T X \Phi} + \bar{Q} - (\overline{\Phi^T X \Gamma} + \bar{M}) L^D - L^{D^T} (\overline{\Gamma^T X \Phi} + \bar{M}^T) + L^{D^T} (\overline{\Gamma^T X \Gamma} + \bar{R}) L^D, \quad X \in S^n.$$

<u>Solution EDSOCP</u>

$\bar{R} > 0$

$P = \lim_{i \to \infty} \frac{1}{i} \sum_{k=0}^{i-1} P_k$ exists

$U_{cs} = \{ -L^D \hat{x}_0^D, -L^D \hat{x}_1^D, \ldots \}$

$(\Phi_i - \Gamma_i L)$ ms-stable $\Rightarrow$

$S_{L^D} = \lim_{i \to \infty} B_{L^D}^i \Theta$ exists

$S_{L^D} \geq 0$

S_{L^D} is the unique sol. of $S_{L^D} = B_{L^D} S$

$$\sigma_{cs}^{L^D} = \frac{1}{T} \mathrm{tr} \left[\bar{V} S_{L^D} + (\Phi^T S_{L^D} \Phi + Q - S_{L^D}) P \right] + \frac{1}{T} \bar{J}$$

Optimal Estimation

Suppose $\hat{x}'_i$ an arbitrary, not nec. opt., estimator of x_i.

$B \neq 0$, $\hat{x}'_0, \dots, \hat{x}'_{i+1}$ var. rand. $\Rightarrow T_0, \dots, T_i$ det.

So we have to know the realization of T_i before determining $\hat{x}'_{i+1}$.

Therefore we assume <u>intentional stoch. sampling</u> (ISS), i.e. the comp. generates T_i first in the interval $[t_i, t_{i+1})$ and then determines x'_{i+1} on the basis of $Y_i, U_i, T_0, \dots, T_i$.

Thus

$$x_{i+1} = \Phi_i x_i + \Gamma_i u_i + v_i, \quad i = 0, 1, \dots$$
$$y_i = C x_i + w_i, \quad i = 0, 1, \dots$$

$\Phi_i = \Phi(T_i)$, $\Gamma_i = \Gamma(T_i)$, $V_i = V(T_i)$ known.

Now we have a discr.-time syst. with time-dep. par's.

$\hat{x}_i$: <u>lin.</u> min. var. (opt. <u>lin.</u>) estimator of x_i given Y_{i-1}, U_{i-1}.

P_i : estimator error covar.

Optimal <u>linear</u> ISS estimator:

$$\hat{x}_{i+1} = \Phi_i \hat{x}_i + \Gamma_i u_i + K_i (y_i - C\hat{x}_i), \quad \hat{x}_0 = \bar{x}_0,$$

$$K_i = \Phi_i P_i C^T (C P_i C^T + W)^+$$

$$P_{i+1} = \Phi_i P_i \Phi_i^T + V_i - K_i (C P_i C^T + W) K_i^T, \quad P_0 = G.$$

$+$: Moore - Penrose pseudo inverse

$\hat{x}_i$ var. neutral.

Syst. (Φ_i, Γ_i, C) a realization of the EDS, dep. on a realiz. of $\{\Gamma_i\}$, and $\hat{x}_i$ given by the opt. lin. ISS estimator.

$W > 0$, (Φ_i, C) a.s. uniformly det., $(\Phi_i, V_i^{1/2})$ a.s. uniformly stab. $\Rightarrow$

Estimator $\hat{x}_i$ a.s. exponentially stable,

P_i a.s. bounded

$$P = \lim_{\substack{i \to \infty \\ \text{a.s.}}} \sum_{k=0}^{i-1} P_k \quad \text{a.s. exists}$$

Influence Stoch. Sampling

Suppose $T_i = T$, thus $\Phi_i = \Phi(T) = \Phi$, $\Gamma_i = \Gamma(T_i) = \Gamma$:

- (A,B) stab'e, (A,C) det'e, $\lambda(A)$ real $\Rightarrow$ (Φ,Γ) stab'e, (Φ,C) det'e.
- (A,B) stab'e, (A,C) det'e, $\lambda(A)$ complex, $T \neq \dfrac{k\pi}{|\mathrm{Im}(\lambda(A))|}$, $k=0,1,\dots$ $\Rightarrow$

(Φ,Γ) stab'e, (Φ,C) det'e.

$\lambda(A)$ complex: We may loss stab'y of (Φ,Γ) and det'y of (Φ,C), <u>thus sol. of LQG probl. may break down.</u>

$\mathrm{Var}(T) > 0 \Rightarrow$ <u>no</u> loss of as. stab'y of (Φ_i,Γ_i) and unif. det'y of (Φ_i, C).
<u>Thus sol. of LQG probl. does not break down</u>

T_i uniformly distributed:

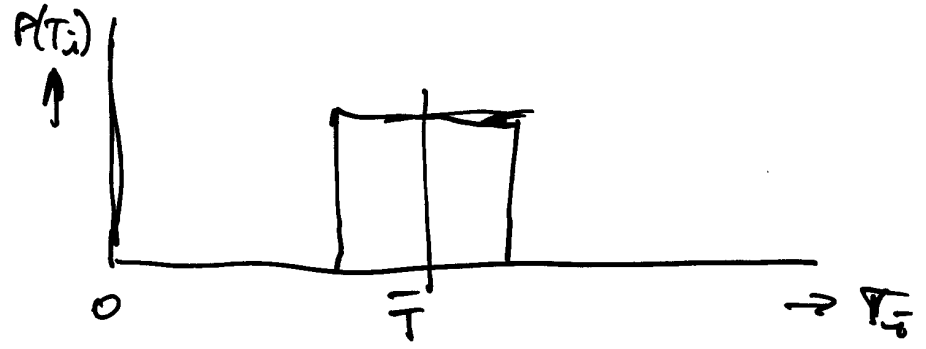

Mean $\bar{T}$

$Var.(T_i) = E\{T_i - \bar{T}\}^2$

$T_i > 0 \Rightarrow var(T_i) < \frac{1}{3}\bar{T}^3$

Denote σ_{cs} with $\frac{var(T)}{\bar{T}} = \xi$ as $\sigma_{cs}(\xi)$.

Consider:

$\sigma_{cs}^{*}(0)$ Opt., no stoch. T_i.

$\sigma_{cs}^{*}(\xi)$ Opt., stoch. T_i taken into account.

$\sigma_{cs}^{D}(\xi)$ Subopt., stoch. T_i <u>not</u> taken into account, indep. of ξ.

Assume

$$A = \begin{bmatrix} 0.01 & 1 \\ 0 & 0.01 \end{bmatrix}, \quad B = \begin{bmatrix} 0 \\ 1 \end{bmatrix}, \quad C = [0 \ 1],$$

$$V = \begin{bmatrix} 1 & 0 \\ 0 & 1 \end{bmatrix}, \quad W = [0.01], \quad Q = \begin{bmatrix} 1 & 0 \\ 0 & 1 \end{bmatrix}, \quad R = [0].$$

(A,B) stab'e, (A,C) det'e

$\lambda(A) = 0.01, 0.01$, thus real and unstable

$\mathrm{var}(T) = 0 \Rightarrow (\Phi, \Gamma)$ stab'e, (Φ, C) det'e $\Rightarrow$
$\Rightarrow \sigma_{cs}^*$ ex. and L^Δ.

$\mathrm{var}(T) > 0 \Rightarrow \bar{R} > 0$, (Φ_i, Γ_i) ms-stab'e, (Φ_i, C) a.s.m.det'e
$\Rightarrow \sigma_{cs}^*$ ex.

$\mathrm{var}(T) > 0 \Rightarrow (\Phi_i - \Gamma_i L^\Delta)$ ms-stable $\Rightarrow$
$\Rightarrow \sigma_{cs}^{L^\Delta}$ ex.

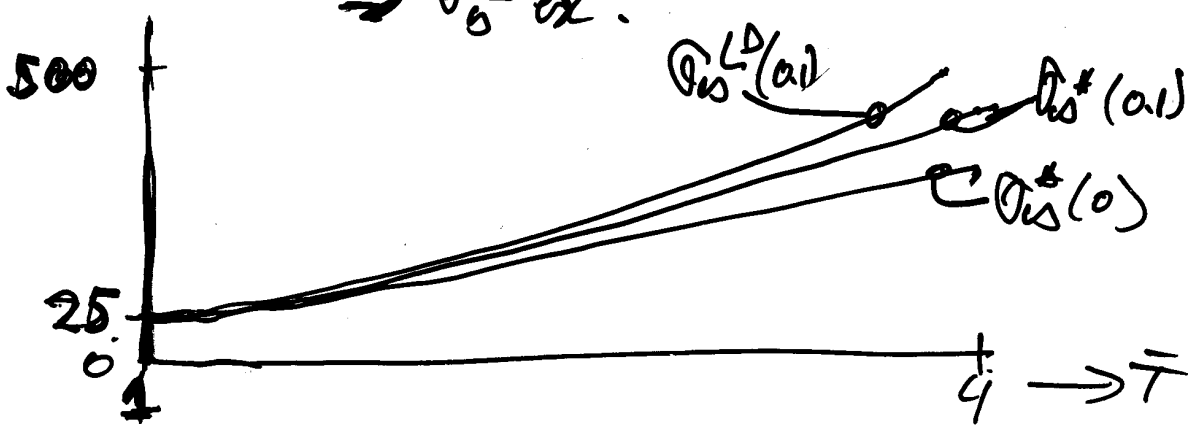

Assume

$$A = \begin{bmatrix} 0.01 & -1 \\ 1 & 0.01 \end{bmatrix}, \quad B, C, V, W, Q, R \text{ the same.}$$

(A, B) reachable, (A, C) det'e.

$\lambda(A) = 0.01 \pm j$, thus complex and unstable

$\mathrm{var}(T) = 0 \Rightarrow (\Phi, \Gamma)$ not stab'e, (Φ, C) not det'e, L^D does not exist for $T = k\pi$, $k = 1, 2, \ldots$

$\mathrm{var}(T) > 0 \Rightarrow R > 0$, (Φ_i, Γ_i) ms-stab'e, (Φ_i, C) a.s. un. det'e

$\Rightarrow \sigma_{cs}^*(\ell)$ exists.

$\mathrm{var}(T) > 0 \Rightarrow (\Phi_i - \Gamma_i L^D)$ ms-unstable, any L, for $T = k\pi$, $k = 1, 2, \ldots$, then $\sigma_{cs}^{L^D}(\ell)$ does not exist.

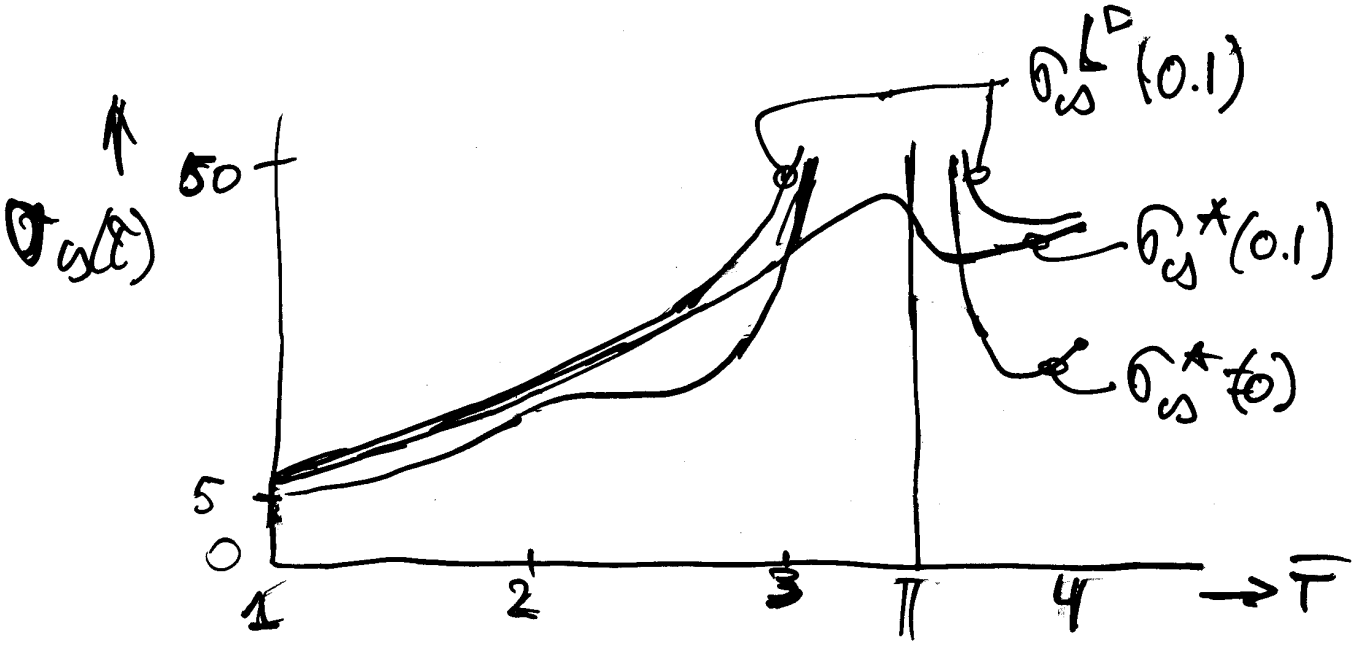

Conclusions

Named effects arise in general for cont.-time syst. with (A,B) stabilizable, (A,C) detectable, and general distrib's of T_i.

Especially if $\mathrm{var}(T) > 0$:
- Take stoch. sampl. into account. Then no asymptotes, furthermore almost the same behav.
- Take stoch. <u>not</u> into account. Then <u>yes</u> asymptotes, furthermore almost the same behav.

With stoch. sampl. more inform. comes out of the syst. Ms-obs'y of system increases.

USE IT OR LOSE IT principle:
- Stoch. sampl. may <u>incr.</u> or restore stab'y if taken into account in determining the opt. contr'r
- stoch. sampl. may <u>decr.</u> or even destroy stab'y if <u>not</u> taken into account in determining the opt. contr'r.

Incomplete state inform:
- Stoch. sampl. intentional, then opt. contr. prob. is separable.
- Stoch. sample <u>not</u> intentional, then opt. contr. probl. is <u>not</u> separable. This problem is much more difficult.

Compulsory Excercises

Pick up from the course internet site the paper:
W.L. de Koning, L.G. van Willigenburg
Randomized digital optimal control
Nonuniform sampling: Theory and Practice,
Kluwer Academic, 2001, pp. 519-542, ch. 12.

Excercises

1. Suppose the state inform. is incompl. and the stoch. sampl. is not intentional. Then the EDOCP is not separable. Give suggestions to solve this problem in an optimal way.
2. Reproduce fig. 3 and fig. 5 from the above mentioned paper in Matlab, using the software package on the course internet site.

Solution compulsory exercise 1.

What to do and how to solve the problem when the stochastic sampling is not intentional is described in the conclusion of the paper where the reader is referred to reference [28] and [29]. Reference [28] and [29] solve the associated non-separable control problem in the infinite horizon time-invariant and finite horizon time-varying case respectively.

Solution compulsory exercise 2.
See the Matlab solution m-files.