Disc Course:
Digital Optimal Control

Organisation:

- Every lecture supports the contents of one or two papers that have to be studied and one or two compulsory exercises.
- The solutions of the compulsory exercises, being either PDF documents and/or Matlab files, should be sent by e-mail to the lecturer, before Friday 14.00 hour the same week.

  e-mail:
  Lectures 1-2 : gerard.vanwilligenburg@wur.nl
  Lecture 3 : w.l.dekoning@ewi.tudelft.nl
  Lecture 4 : No compulsory exercises
- The mark for the course will be a weighted sum of the marks obtained for the compulsory exercises.
- Course material : sheets, papers, software
- Website with information and the course material:
  http://www.aenf.wau.nl/mrs/Education/discours/discours.html

Lecture 1.
A Computer Control Philosophy

Dutch Institute of Systems and Control

L.G. van Willigenburg (Wageningen University)
W.L. de Koning (Delft University)

Contents

1. A control story

2. What makes control so difficult?

3. A digital control system

4. Characteristics of digital optimal control problems

5. Digital Optimal Control

6. Transformation of digital optimal control problems into equivalent discrete-time optimal control problems.

7. Digital control $\neq$ Continuous-time control $\neq$ Discrete-time control

8. Digital optimal control and digital optimal feedback

9. Digital optimal LQ and LQG feedback

10. Summary

11. Two compulsory exercises

1. A control story

1977: −− Introduction to systems engineering, John G. Truxal, (1972), Frequency domain analysis, Poles, Zeros, PID control

1986: +/− Introduction to Robotics, John J. Craig (1986): Computed torque control of robots

1986: ??→++ Digital optimal control systems with stochastic parameters, PhD Thesis, Willem de Koning, 1984

1986: ++ Linear optimal control systems, Kwakernaak and Sivan (1972): LQG Theory, multivariable time-varying linear systems, time-domain analysis

1987: ++++ The role and use of the stochastic Linear-Quadratic-Gaussian problem in control system design, M. Athans, 1971, IEEE Trans. Aut. Contr., AC-16(6), 529-552. Optimal control and LQG compensation of multivariable nonlinear systems!!

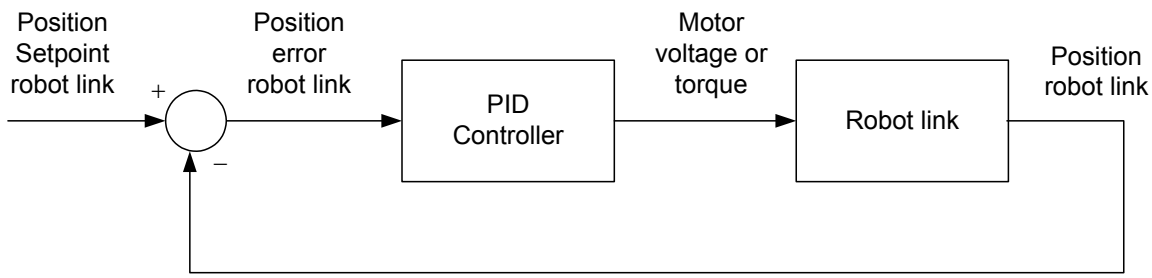

Fig. 1: Classical PID control of a robot

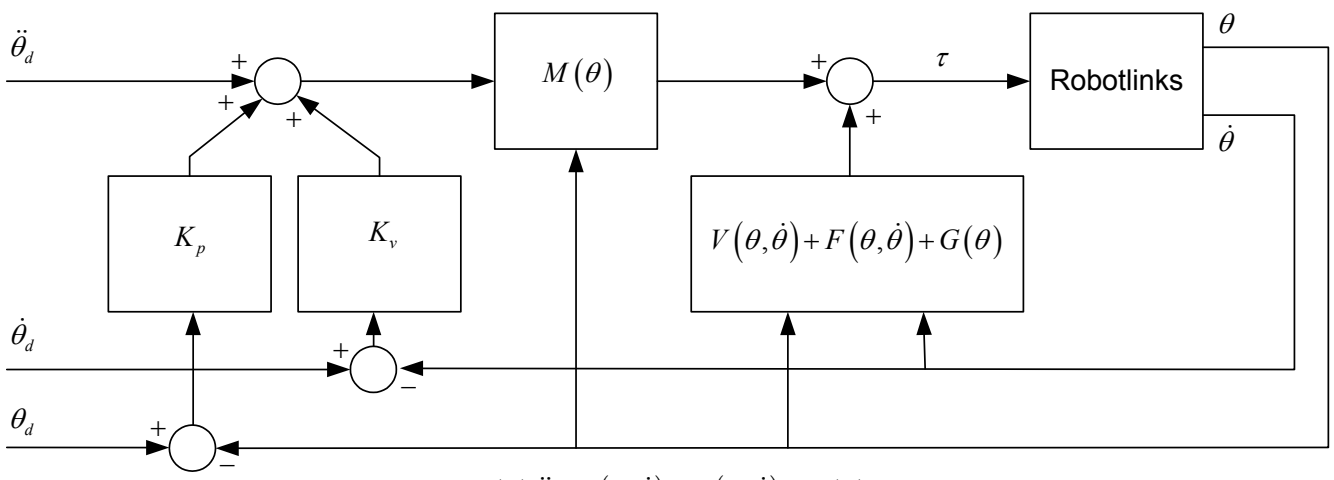

$$\tau = M(\theta)\ddot{\theta} + V(\theta,\dot{\theta}) + F(\theta,\dot{\theta}) + G(\theta)$$

Fig. 2: Model based computed torque control of a robot

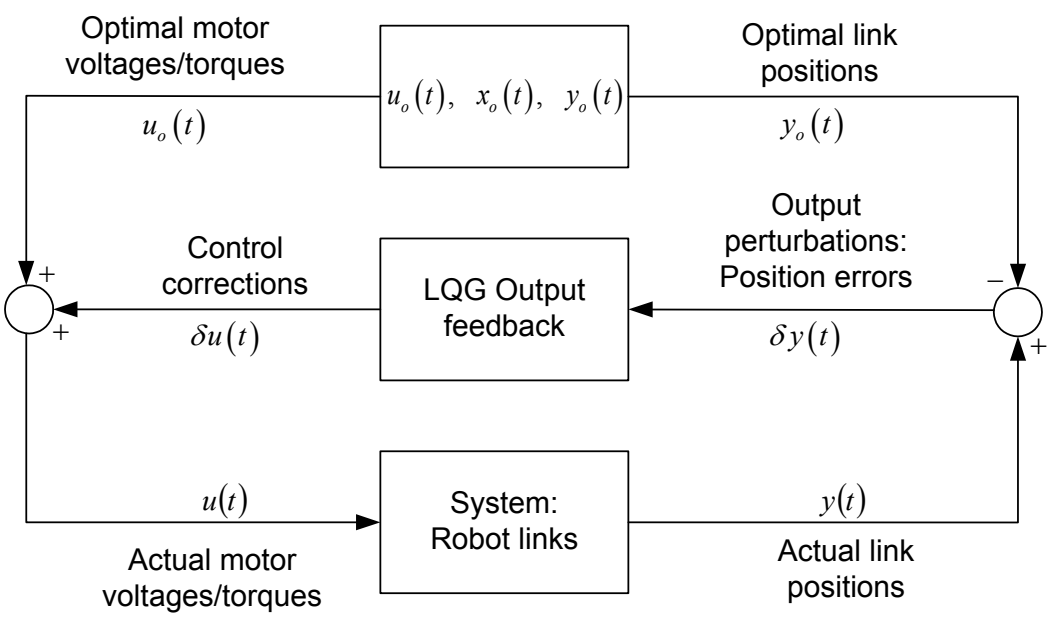

Fig. 3: Optimal control and LQG compensation of a robot

2. What makes control so difficult?

1 Nonlinearity of systems

1,3 (Limited) system and measurement uncertainty

1 Constraints (Control/State equality/inequality constraints)

2 Systems with high or infinite dimensions

2,3 Limitations and imperfections of I/O equipment

2 Computational and memory limits of digital controllers

2 Time delays -> infinite dimensional systems

4 System parameter uncertainty

4 Uncertain external inputs

- Uncertain system structure
- Stiffness of systems (largely different time-scales)
- Time-varying system structure (organisms)
- ...

3. A digital control system:

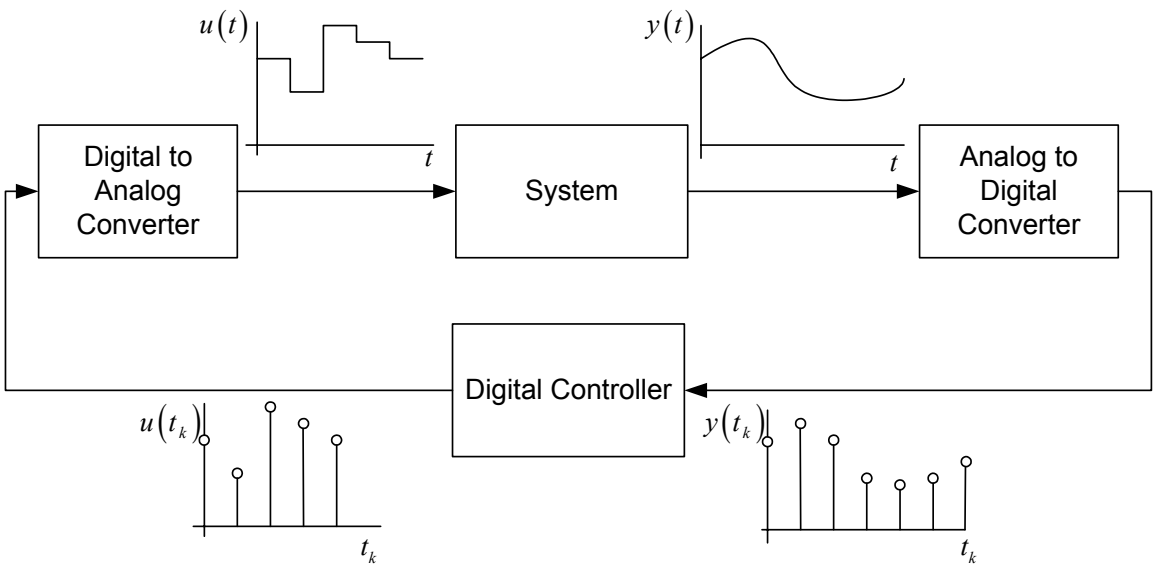

A digital control system

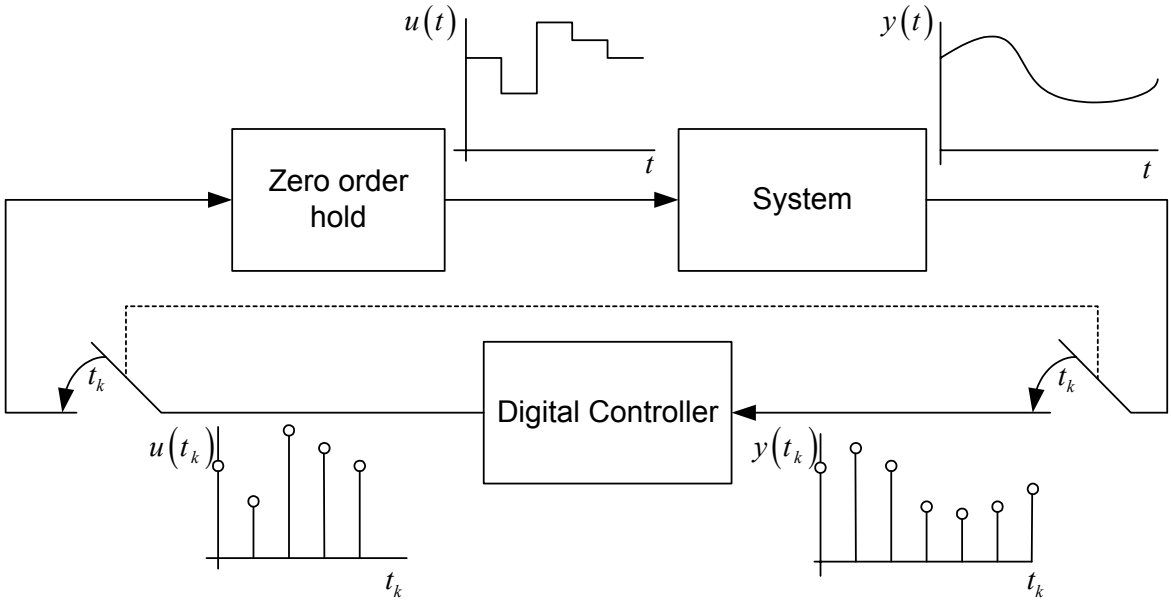

Mathematical picture of a digital control system

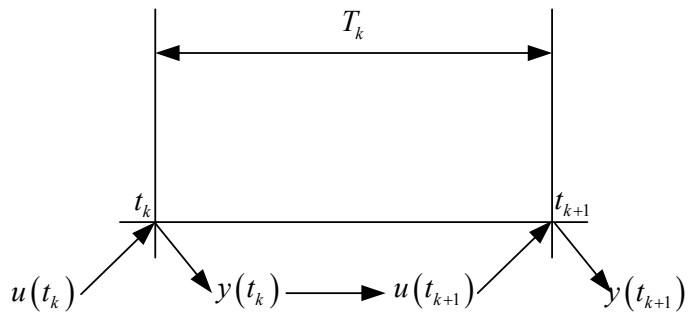

Task sequence of the digital controller

- $t_k, k=0,1,..,N$: Sampling instants

- $T_k = t_{k+1} - t_k, k=0,1,..,N-1$: Sampling intervals

4. Characteristics of digital control problems:

a) Measurements are available at the sampling instants $t_k, k=0,1,..$ only.

b) The control is updated (changed) at the sampling instants $t_k, k=0,1,..$ only and remains unchanged in between two sampling instants:
$u(t)=u(t_k), t_k \le t \le t_{k+1}$; a piecewise constant control.

c) The continuous-time system behaviour is of interest.

5. Digital Optimal Control

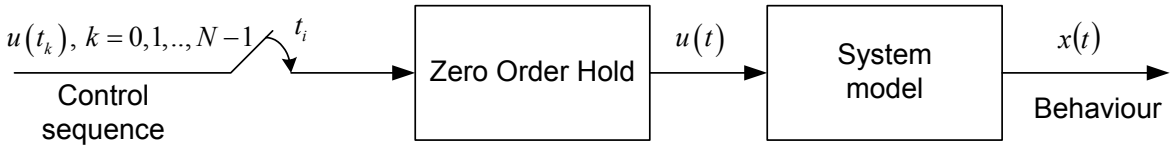

- Digital control problem: Find the <u>control sequence</u> $u(t_k), k=0,1,..,N-1$ such that the <u>continuous-time system behaviour</u> $x(t), t_0 \le t \le t_N$ meets our requirements.
- Translate the requirements into a <u>cost function</u>.
- Digital optimal control problem: Find the control sequence $u(t_k), k=0,1,..,N-1$ that <u>minimizes</u> the cost function.

Mathematically:
Given
- the system model in state-space form: $\dot{x} = f(x,u,t)$
- the initial state: $x(t_0)$

find the
- control sequence $u(t_k), k=0,1,..,N-1$

that minimizes
- the cost function: $J(u(t)) = \Psi(x(t_N), t_N) + \int_{t_0}^{t_N} L(x,u,t)\,dt$

Note: No system outputs / measurements are involved!

6. Transformation of digital optimal control problems into <u>equivalent</u> discrete-time optimal control problems.

- $x(t_{k+1}) = x(t_k) + \int_{t_k}^{t_{k+1}} f(x,u,t)dt$

  $x(t_k) + \int_{t_k}^{t_{k+1}} f(x,u,t)dt = f^{ed}\left(x(t_k), u(t_k), k\right)$

- $J(u(t)) = J(u(t_k)) = \Psi(x(t_N), t_N) + \sum_{k=0}^{N-1} \int_{t_k}^{t_{k+1}} L(x(t), u(t))dt$

  $\int_{t_k}^{t_{k+1}} L(x(t), u(t), t) = L^{ed}\left(x(t_k), u(t_k), k\right)$: running costs over $[t_k, t_{k+1})$

- $x(t_k) \to x_k, u(t_k) \to u_k$

  $x_{k+1} = f_k^{ed}(x_k, u_k)$: equivalent discrete-time system

  $J(u_k) = \Psi(x_N, N) + \sum_{k=0}^{N-1} L_k^{ed}(x_k, u_k)$: equivalent discrete-time cost function

- f_k^{ed}, L_k^{ed} can be computed by simultaneous numerical integration of f and L.

7. Digital control $\neq$ Continuous-time control $\neq$ Discrete-time control

a) Continuous-time LQ regulator problem:

$$\dot{x}(t) = A^c(t)x(t) + B^c(t)u(t),$$

$$J\big(u(t)\big) = x^T(T)Fx(T) + \int_{t_0}^{T} x^T(t)Q^c(t)x(t) + u^T(t)R^c(t)u(t)dt$$

Optimal control: $u(t) = -G^c(t)x(t)$

Digital implementation: $u(t_k) = -G^c(t_k)x(t_k)$

b) Discrete-time LQ regulator problem

$$x_{k+1} = A_k^{ed}x_k + B_k^{ed}u_k,\ J(u_k) = x_N^T F x_N + \sum_{k=0}^{N-1} x_k^T Q_k^d x_k + u_k^T R_k^d u_k$$

where : $x_k = x(t_k),\ t_N = T$,

A_k^{ed}, B_k^{ed}: Equivalent discrete-time system, $x_k = x(t_k), u_k = u(t_k)$

Optimal control: $u_k = -G_k^d x_k$

Digital implementation: $u(t_k) = -G_k^d x(t_k)$

c) Digital LQ regulator problem:

$$\dot{x}(t) = A^c(t)x(t) + B^c(t)u(t),$$

$$J\big(u(t)\big) = x^T(T)Fx(T) + \int_{t_0}^{T} x^T(t)Q^c(t)x(t) + u^T(t)R^c(t)u(t)dt$$

$$u(t) = u(t_k), t_k \le t < t_{k+1}, k = 0,1,..,N-1,\ t_N = T$$

Equivalent discrete-time LQ regulator problem:

$$x_{k+1} = A_k^{ed} x_k + B_k^{ed} u_k,$$

$$J\left(u_k\right) = x_N^T F x_N + \sum_{k=0}^{N-1} x_k^T Q_k^{ed} x_k + 2x_k^T M_k^{ed} u_k + u_k^T R_k^{ed} u_k$$

Digital implementation: $u\left(t_k\right) = -G_k^{ed} x\left(t_k\right)$

d) a) $\neq$ b) $\neq$ c), and c) is optimal and does not require small sampling periods.

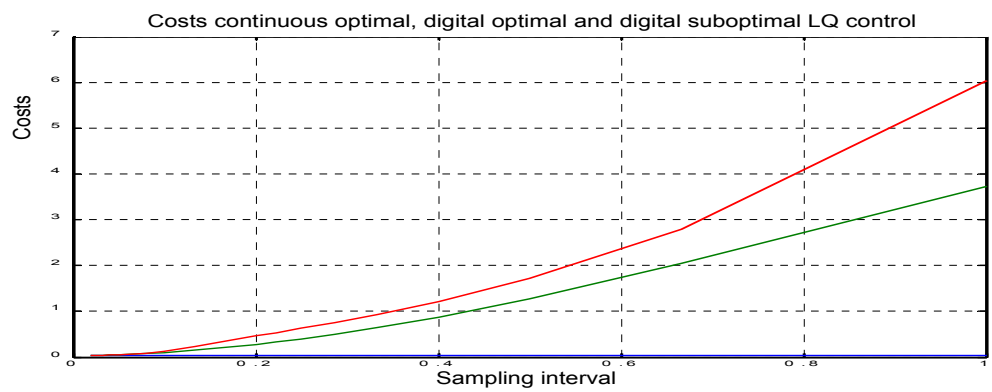

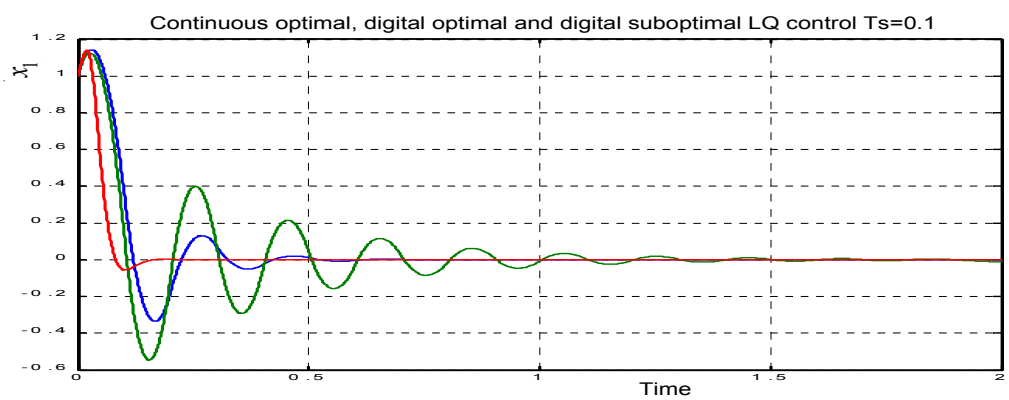

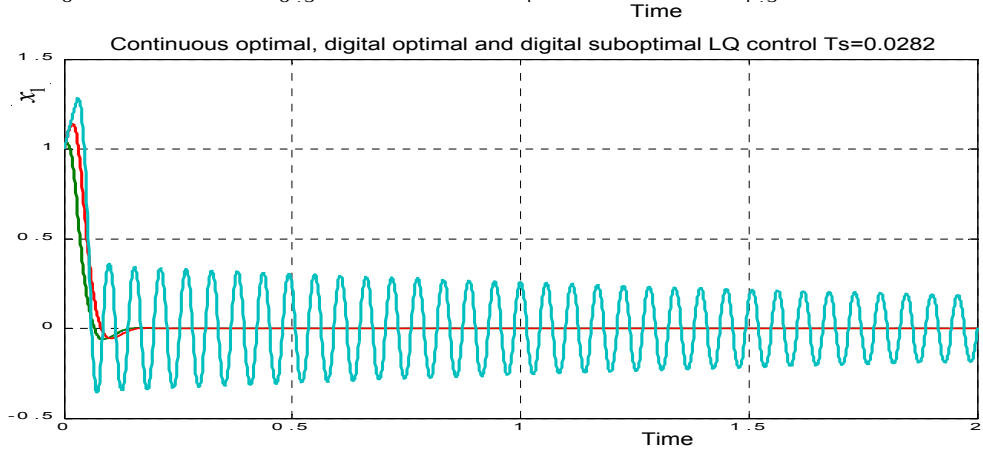

8. Digital optimal control and digital optimal feedback

Solution of the digital optimal control problem:

$$u_o\left(t_k\right), k=0,1,..,N-1,\ x_o\left(t\right),\ t_0 \le t \le t_f$$

If the model and the initial state are exact:

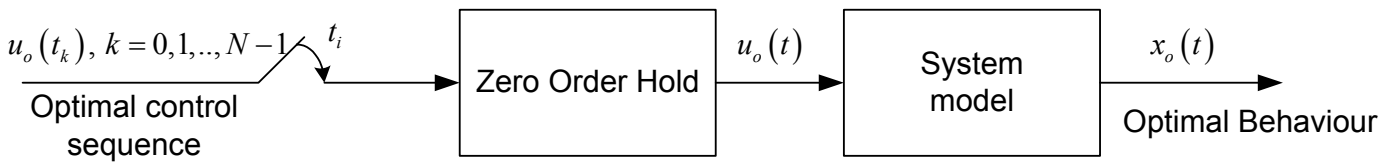

If the model and/or the initial state are not exact:

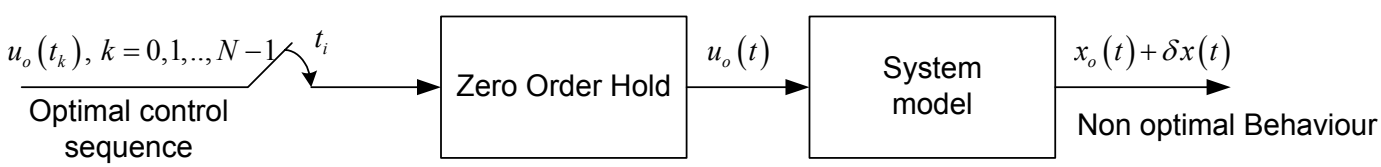

Problem: how to limit $\delta x\left(t\right)$? Solution: by feedback.

State Feedback:

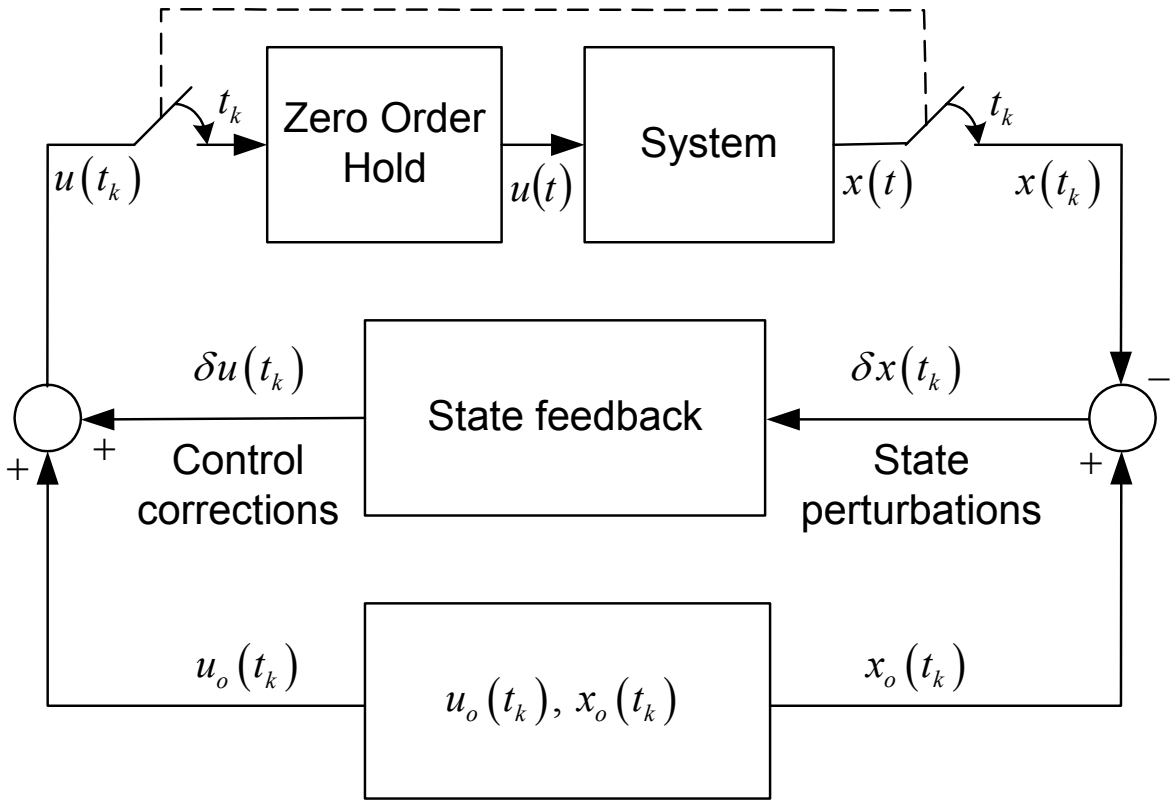

$$\delta x(t_k) = x(t_k) - x_o(t_k),\ \delta u(t_k) = u(t_k) - u_o(t_k)$$

Example:

Static state feedback : $\delta u(t_k) = -G(t_k)\delta x(t_k)$

State feedback is usually static meaning that there is an algebraic relation between $\delta u(t_k)$ and $\delta x(t_k)$.

Problem: The complete state must be measured. In practice this is often impossible or to expensive.

Output feedback:

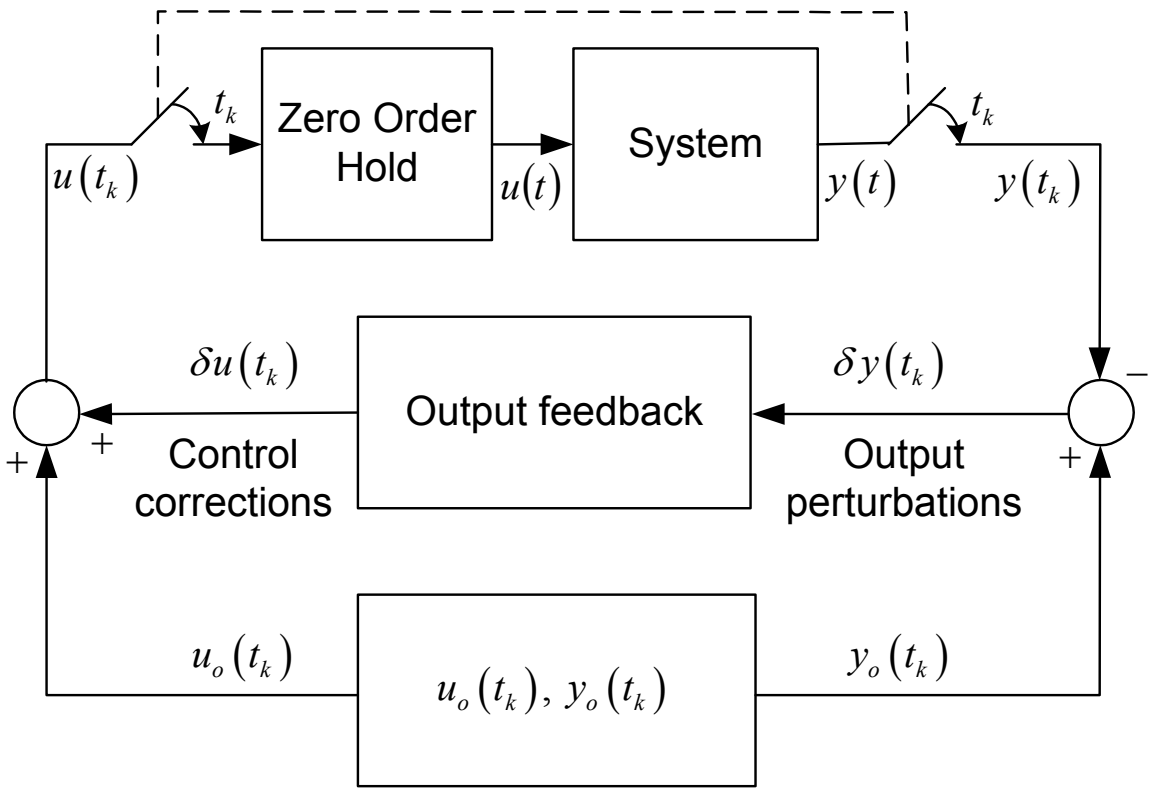

$$\delta y(t_k) = y(t_k) - y_o(t_k),\ \delta u(t_k) = u(t_k) - u_o(t_k)$$

Example: Dynamic output feedback

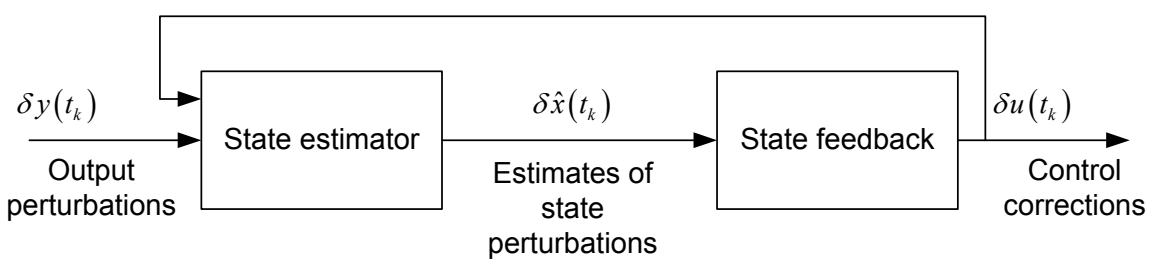

The state estimator is a dynamic system. Therefore this type of output feedback is called dynamic.

Remark: To limit perturbations state feedback is usually more successful than output feedback.

9. Digital optimal LQ and LQG feedback

Change of notation:

$$\delta u\left(t_k\right) \to \delta u_k,\ \delta x\left(t_k\right) \to \delta x_k,\ \delta y\left(t_k\right) \to \delta y_k$$

Digital optimal static LQ state feedback

$\delta u_k = -G_k \delta x_k$.

G_k: Feedback gains computed from an <u>equivalent discrete-time Linear Quadratic (LQ) regulator problem</u>

Digital optimal dynamic LQG output feedback

The state feedback part is identical to LQ state feedback with the state δx_k replaced by its estimate $\delta \hat{x}_k$:

$$\delta u_k = -G_k \delta \hat{x}_k$$

State estimator: The <u>equivalent discrete-time</u> Kalman one step ahead predictor:

$$\delta \hat{x}_{k+1} = A_k^{ed} \delta \hat{x}_k + B_k^{ed} \delta u_k + H_k \left(\delta y_k - C_k \delta \hat{x}_k\right),\ \ \delta \hat{x}_0 = 0$$

The computation of H_k is <u>dual</u> to the computation of G_k.

Digital optimal LQG compensator:

$$\delta \hat{x}_{k+1} = F_k \delta \hat{x}_k + H_k \delta y_k,\ \delta u_k = -G_k \delta x_k,\ F_k = A_k^{ed} - B_k^{ed} G_k - H_k C_k$$

Off-line computations and storage

$F_k, G_k, H_k, k = 0,1,..,N-1$: Computed <u>offline</u> and stored in the digital controller memory together with $u_o\left(t_k\right), y_o\left(t_k\right)$

Digital optimal LQG feedback design problem

The system:
The linearized system model about the optimal solution $u_o(t), x_o(t)$:

$$A_o(t)=\left.\frac{\partial f}{\partial x}\right|_{x=x_o(t),\,u_o=u(t)},\ B_o(t)=\left.\frac{\partial f}{\partial u}\right|_{x=x_o(t),\,u=u_o(t)},\ C_o(t)=\left.\frac{\partial g}{\partial x}\right|_{x=x_o(t),\,u=u_o(t)}$$

that describes approximately the dynamic perturbation behaviour $\delta u(t), \delta x(t), \delta y(t)$.

The white additive system uncertainty:

$$\xi(t): E\left(\xi(t)\right)=0,\ E\left(\xi^T(t)\xi(\tau)\right)=\Xi(t)\delta(t-\tau)$$

The white additive measurement noise:

$$\Theta(t): E\left(\Theta(t)\right)=0,\ E\left(\Theta^T(t)\Theta(\tau)\right)=\Theta(t)\delta(t-\tau)$$

The initial state: $E\{\delta x_0\}=0,\ E\{\delta x_0 \delta x_0^T\}=\Xi_0$

The quadratic cost function:

$$J\left(\delta u(t)\right)=\delta x^T(t_N)F_o\delta x(t_N)+$$
$$\int_{t_0}^{t_f}\left[\delta x^T(t)Q_o(t)\delta x(t)+\delta u^T(t)R_o(t)\delta u(t)\right]dt$$

that keeps the linearization "honest" and the perturbations small.

Problem data: $A_o(t), B_o(t), C_o(t), \Xi_o, \Xi(t), \Theta(t), F_o, Q_o(t), R_o(t)$

10. Summary

To synthesize the digital optimal controller we have to determine and solve:

1) A digital optimal control problem involving the nonlinear system and a cost function reflecting our requirements.

2) A digital linear quadratic regulator problem to compute the optimal LQ state feedback.

3) In the case of digital optimal LQG output feedback another linear quadratic regulator problem to determine the Kalman one step ahead estimator gain.

   In the case of a continuous-time control system the synthesis, motivation and philosophy of the controller are excellently described:

   M. Athans, 1971, "The role and use of the stochastic Linear-Quadratic-Gaussian problem in control system design", IEEE Trans. Aut. Contr., AC-16(6), 529-552

   The adaptations needed in the case of digital control:

   L.G. van Willigenburg, 1990, "Digital optimal control of nonlinear uncertain systems applied to rigid manipulators", page 240-275 in Digital optimal control of rigid manipulators, PhD Thesis, Delft University Press.

11. Two compulsory exercises

- Pick up the paper from the internet site which describes our control philosophy (assuming continuous-time control): M. Athans, 1971, "The role and use of the stochastic Linear-Quadratic-Gaussian problem in control system design", IEEE Trans. Aut. Contr., AC-16(6), 529-552.

- Read the paper carefully and answer the following questions:

1a) Does the control approach described in this paper apply to general non-linear systems and general cost functions? Why?

Yes due to the fact that optimal control can deal with general non-linear systems, cost functions and constraints.

1b) Applying the control approach to a certain control problem and assuming all the necessary software is available, what exactly does the control engineer have to specify?

The system dynamics and the initial state
$\dot{x}(t)=\underline{f}\left(x(t),u(t)\right);\ x(t_0)=\underline{x_0}$ page 532, equation (1) in Athans

The output equation
$y(t)=\underline{g}\left(x(t)\right)$ page 532, equation (2) in Athans

The cost function
$I=\underline{\phi}\left(x(T)\right)+\int_{t_0}^{T}\underline{L}\left(x(t),u(t)\right)dt$ page 533, eq. (4).

The cost function matrices in the quadratic criterion

$$J_0=\delta x^T(T)\underline{F_o}\delta x(T)+\int_{t_0}^{T}\left[\delta x^T(t)\underline{Q_o(t)}\delta x(t)+\delta u^T(t)\underline{R_o(t)}\delta u(t)\right]dt$$

page 536, eq. (28).

The covariance matrix of the white system noise
$\underline{\Xi(t)}\delta(t-\tau)=E\left\{\zeta(t)\zeta^T(t)\right\}$, page 541, eq. (71).

The covariance matrix of the measurement noise
$\underline{\Theta(t)}\delta(t-\tau)=E\left\{\theta(t)\theta^T(t)\right\}$, page 541, eq. (73).

The sampling instants
$\underline{t_i}, t_{i+1}>t_i,\ i=0,1,..,N-1,\ t_N=T$

1c) In what respect is the control approach optimal? In your answer distinguish between the open loop control and the feedback.

The open loop optimal control is optimal with respect to the cost function on page 533, eq. (4). The feedback is optimal with respect to the quadratic cost function on page 536, eq. (28) which is used to keep the linearised model, which is used for the compensation of errors, honest.

1d) Which practical circumstances may lead to a failure of the control approach. What exactly does failure mean in this control approach?

If errors (perturbations) such as modelling, measurement and initial state errors are <u>not small relative to the associated non-linearity of the system</u> the linearised model will not be an accurate description of these errors and so the feedback, which is based on this linearised model, may fail. So an accurate model, accurate measurements and an accurate initial state estimate are required relative to the non-linearity of the system.

Failure means that the errors grow large in other words that the actual state and control deviate significantly form the ideal input state response $x_o(t), u_o(t), t_0 \le t \le T$

1e) Two methods are proposed to choose the matrices $F_o, Q_o(t), R_o(t)$ which determine the feedback design. Which two?

1) $Q_o(t), R_o(t)$ somehow proportional to estimates of the second derivative matrices $\frac{\partial^2 f_i}{\partial x^2(t)}, \frac{\partial^2 f_i}{\partial u^2(t)}$, page 537.

2) $F_o, Q_o(t), R_o(t)$ based on second derivative matrices associated to $\delta^2 J$, page 537.

1f) Which of these two methods may lead to control system failure, even if the practical circumstances to apply the control approach are favourable? Why?

The second one because $Q_o(t) \ge 0, R(t) > 0$ is not guaranteed and in addition penalties on highly non-linear parts of the system may be to small destroying the validity of the linearised model.

1g) Mention as many reasons why to advocate the control approach, described by Athans.

General non-linear systems, cost functions and constraints can be handled.

Very few on-line computations are required.

The approach is optimal both with respect to the open loop control and feedback design.

The design explicitly takes into account both small measurement and modeling errors by representing them through additive white noise.

The approach can be easily adapted to explicitly consider digital control.

Two disadvantages of this approach are often mentioned to be:

The robustness of the approach is limited.
The approach requires a-priori knowledge of the desired control system performance.

2a) Program a Matlab script that computes and plots the minimum costs of the digital optimal LQ regulator and the associated digital suboptimal LQ regulator versus the sampling interval $T_S = T_k = t_{k+1} - t_k, k = 0,1,..,N-1$, see the first figure on page 1-11.

To do this within your Matlab script use (call) the matlab functions edorti.m and sric.m which you can download from out internet sight:
http://www.aenf.wau.nl/mrs/Education/discours/discours.html

Initially take the problem data as on page 1-11:

$$A(t) = \begin{bmatrix} 0 & 1 \\ 0 & -2.5 \end{bmatrix}, B(t) = \begin{bmatrix} 0 \\ 275 \end{bmatrix}, Q(t) = \begin{bmatrix} 1 & 0 \\ 0 & 0 \end{bmatrix}, R(t) = 10^{-2}, 0 \le t \le T, T = 2$$

$$F = \begin{bmatrix} 0 & 0 \\ 0 & 0 \end{bmatrix}, x_0 = \begin{bmatrix} 1 \\ 10 \end{bmatrix}, Q_k^d = T_s Q(t), R_k^d = T_s R(t)$$

Check whether you reobtain the first figure on page 1-11.

See the solution m-file: ex2.m listed at the end.

b) Try to find problem data where the difference between the costs of the digital optimal and digital sub-optimal LQ regulator are larger.

Change $A(t)=\begin{bmatrix} 0 & 1 \\ 0 & -2.5 \end{bmatrix}$ into $A(t)=\begin{bmatrix} 0.01 & -1 \\ 1 & 0.01 \end{bmatrix}$

The behavior of this new system is much more oscillatory and therefore results in much larger differences.

```
% Ex2.m: Solution m-file

% Vector with successive number of sampling periods within T=2
Nsv=[2 3 4 5 6 7 8 9 10 15 20 25 30 35 40 45 50 60 70 80 90 100];

% Initialize arrays for digital costs, suboptimal digital (discrete-time)
% costs and the sampling time
dgcost=[]; dcost=[]; tsv=[];

for Ns=Nsv

  tf=2; ts=tf/Ns; % final time, sampling time
  dt=1e-3; ni=round(ts/dt); % numerical integration step and
                            % associated number of steps within ts

%Digital LQ regulator problem data
  as=[0 1;0 -2.5];
%  as=[0.01 -1; 1 0.01];
  bs=[0;275];
  qs=[1 0; 0 0]; rs=1e-2; h=[0 0;0 0]; x0=[1;10];
  [n,m]=size(bs); v=qs; % Problem data

  % Compute equivalent discrete-time regulator problem data
  [phi1,gam1,qi1,ri1,am1,vi,gk]=edorti(as,bs,qs,rs,v,ts,ni);

  % Suboptimal discrete-time LQ regulator problem data
  qi2=ts*qs; ri2=ts*rs; am2=0*am1;

  % Initialization Riccati recursions
  si1=h;

  % Optimal feedback: Backward in time Riccati equation recursions
  for i=Ns:-1:1
    % Digital optimal LQ regulator problem
    [al,si1]=sric(phi1,gam1,qi1,ri1,am1,si1);
  end
  % Digital optimal costs
```

```
  co1=x0'*si1*x0

  % Initialization 2 Riccati recursions
  si1=h; si2=h;
  for i=Ns:-1:1
    % Discrete-time suboptimal LQ regulator problem
    % a) Suboptimal feedback computation
    [al,si2]=sric(phi1,gam1,qi2,ri2,am2,si2);

    % b) Substitution sub-optimal feedback in equivalent discrete
      Riccati equation
    %    to compute the digital sub-optimal costs
    [al,si1]=sric(phi1,gam1,qi1,ri1,am1,si1,al);
  end

  % Digital sub-optimal costs
  co2=x0'*si1*x0

  % Store costs and sampling time in associated arrays
  dgcost=[dgcost co1]; dcost=[dcost co2]; tsv=[tsv ts];
end

% Plot costs against ts
figure(1); plot(tsv,[dgcost;dcost]);
xlabel('Sampling interval')
ylabel('Costs and suboptimal costs')
title('Optimal digital and suboptimal digital costs versus Ts')
grid
```