DIGITAL OPTIMAL CONTROL OF RIGID MANIPULATORS

DIGITAL OPTIMAL CONTROL OF RIGID MANIPULATORS

Proefschrift ter verkrijging van de graad van
doctor aan de Technische Universiteit Delft
op gezag van Rector Magnificus prof. drs. P.A. Schenck
in het openbaar te verdedigen
ten overstaan van een commissie
aangewezen door het College van Dekanen
op 5 februari 1991 te 16.00 uur door

Louis Gerard van Willigenburg
geboren te Leiden
elektrotechnisch ingenieur

Delftse Universitaire Pers / 1991

Dit proefschrift is goedgekeurd door
de promotor:

Prof. dr. A. Johnson

Uitgegeven en gedistribueerd door:

Delftse Universitaire Pers
Stevinweg 1
2628 CN Delft, the Netherlands
Telephone: (0)15-783254
Telefax: (0)15-781661

ISBN 90-6275-661-1
NUGI 832

Aan mijn ouders, Angela, Raisa en Gup

CONTENTS

PREFACE

This dissertation is the result of my research activities with the Process Dynamics and Control Group of the Department of Applied Physics of the Delft University of Technology, The Netherlands. Many people have contributed to its completion. I will confine myself to mentioning a few names.

Alan Johnson, my promotor, who gave me the freedom to arrange the research according to my own insights, and kept me far from bureaucracy. He delivered indispensable support as well as valuable critisism and suggestions.

Willem de Koning, who used to work with the Process Dynamics and Control Group, and now works with the Department of Mathematics, delivered the inspiration, the madness and the discussions I so badly needed.

Thetmar Joosting, Marjolein Trijssenaar, Jurriaan vd Pol, Rene Govaerts and Ralph Loop all participated in this research as part of their study, and forced me into details.

The people of the Kramers Laboratory, where this research took place all helped me in their own special ways to finish this thesis.

Finally Angela who urged me to continue in the beginning and who kept me on the world of the ordinary in the end.

Samenvatting

Teneinde digitale regelproblemen op te lossen worden ze dikwijls benaderd door discrete-tijd problemen. In dit proefschrift wordt aangetoond dat het zonder benaderingen oplossen van digitale regelproblemen het ontwerp en de toepassing van digitale optimale robot regelingen met een "grote" sample tijd mogelijk maakt. Dit is van groot belang daar in het geval van robot-regeling de computer in het algemeen zwaar belast is met rekentaken. Het bepalen van de gewenste beweging van de robot als functie van de tijd is dikwijls de uitkomst van een niet lineair optimaal sturings probleem. Aangetoond wordt dat het expliciet gebruiken van het stapvormige karakter van de sturing de oplossing van dit probleem soms vereenvoudigt.

We concentreren ons op drie typen robot regelproblemen en beschouwen zowel cartesische robots, waarvan de dynamica overwegend lineair is, naast andere typen, waarvan de dynamica niet lineair is. We lossen het tijd optimale regelprobleem op waarbij de begin en eindposities alsmede snelheden van de afzonderlijke robot armen zijn voorgeschreven, gegeven begrenzingen van de stuurvariabelen.

We lossen het probleem op waarbij de robot in minimum tijd een voorgeschreven beweging in de ruimte, genaamd een pad, moet doorlopen. Het pad beschrijft de gewenste posities van de afzonderlijke robot armen als functie van een zekere parameter.

Bij het oplossen van de voorgaande twee problemen werd aangenomen dat de sturing continu is in de tijd. Tenslotte lossen we het tracking-probleem op waarbij de gewenste posities van de afzonderlijke robot armen zijn gegeven als functie van de tijd. Deze kunnen bijvoorbeeld de uitkomst zijn van een van de twee voorgaande problemen. Het doel is deze robot beweging zo nauwkeurig mogelijk te realiseren rekening houdend met het stapvormige karakter van de sturing. De oplossing van het tracking probleem wordt gegeven in teruggekoppelde vorm en is zodanig dat slechts de terugkoppeling on-line behoeft te worden berekend. Omdat het digitale regelprobleem zonder benaderingen wordt

opgelost kan een "grote" sample-tijd worden gekozen. Zelfs in het geval van robots met een aanzienlijk aantal vrijheids graden, is de oplossing derhalve geschikt voor implementatie in relatief eenvoudige, langzame computers.

Summary

In order to solve digital control problems they are generally *approximated* by discrete-time problems. In this thesis we demonstrate that solving digital control problems *without making any approximations* allows for the design and use of digital robot controllers with "large" sampling times. This is very important since in the case of robot control the computational burden on the computer is generally high. The determination of the desired robot motion as a function of time often involves a nonlinear optimal control problem. This problem is generally solved assuming a continuous-time control. We demonstrate that explicitly using the piecewise constant nature of the digital control may simplify the solution of this nonlinear optimal control problem.

We focus on three types of robot motion control problems where we consider both rigid cartesian robots, having basically linear dynamics, and other types, having non-linear dynamics. We solve the time-optimal control problem where the initial and final positions and velocities of the robot links are prescribed and the objective is to realize the transition in minimum time, given bounds on the control variables.

We solve the time-optimal path tracking problem where the link positions are prescribed as a function of a certain parameter. This parameterization is called a path and describes the desired robot motion in space. Again the objective is to travel the path in minimum time given bounds on the control variables.

In the previous two problems we assume a continuous-time control. Finally we solve the tracking problem where the link positions are specified as a function of time. These could be for example the outcome of the previous two problems. The objective of the tracking problem is to track the prescribed robot motion as close as possible given the piecewise constant constraint on the control. The solution of the tracking problem is in feedback form, and characterized by the fact that it only requires the feedback to be computed on-line. Furthermore since the digital control problem is not approximated by a discrete-time problem it allows

for the choice of "large" sampling times. Therefore even for robots with a large number of degrees of freedom, it is suited for implementation in relatively simple, slow computers.

INTRODUCTION

1 Motivation and general research objectives

Robot manipulators are actuated mechanical mechanisms designed and build by men. Therefore most parameters involved in the dynamic behavior of manipulators are known in principal. Compared to the dynamics of many other processes, such as chemical ones, the dynamics of manipulators are very well known. This justifies an optimal control approach. Other approaches to control, such as adaptive and robust control, are justified if vital dynamic parameters are unknown. In the literature however, the majority of proposed control schemes for manipulators, is based on adaptive control (Wen and Bayard 1988a,b). This is usually motivated by reasoning that the load the manipulator will carry is unknown. However in most industrial applications *the load is known in advance and so is the desired manipulator motion*. The latter assumptions will be used throughout this thesis. This implies that *most computations can be performed off-line* allowing for *very simple on-line controllers for manipulators with even a large number of degrees of freedom*. If we do not assume the load and the manipulator motion to be known in advance, the results of this thesis might still be valueable, for instance if we apply optimal receding horizon controllers. In these cases however the number of on-line computations to be performed increases dramatically.

In the treatment of manipulator control problems one generally considers actuation torques or forces, applied to the mechanism, to be the control variables (Bobrow et al. 1985, Craig 1986, Geering et al. 1986, Shin and Mc Kay 1986, Bayard and Wen 1988a,b). In this thesis we will focus on manipulators actuated by current controlled DC-motors. Most industrial manipulators are actuated by DC-motors since DC motors operate over a wide speed range and have excellent control chacteristics (Leonhard 1985). Since the motor-current of a DC-motor is proportional to the

torque it generates, the structure of the manipulator dynamic model is not affected by the actuator dynamics, assuming the transmission from the motor to the mechanism to be perfectly rigid, i.e. the transmission does not suffer from backlash or flexibility. Throughout this thesis we consider *rigid manipulators* which constitutes the latter assumption and the assumption that the mechanism is perfectly rigid. Implemented controllers based on these assumptions demonstrated proper performance (Mills, Kuruvila and Singh 1986, Khosla and Kanade 1988). Only in case of rigid manipulators do measurements of the motor position and speed directly reflect the individual positions and speeds of the links, and thereby the position and orientation of the Tool Center Point.

The approach to the optimal control of rigid manipulators presented in this thesis differs from other optimal control approaches in the following way. Manipulators are controlled by digital computers, so the control problems constitute *digital control problems*, i.e. problems where a continuous-time system is controlled by a digital computer. The digital control system is schematically represented by figure 1, and consists of a continuous-time system with a sampler at the output and a sampler and zero order hold at the input.

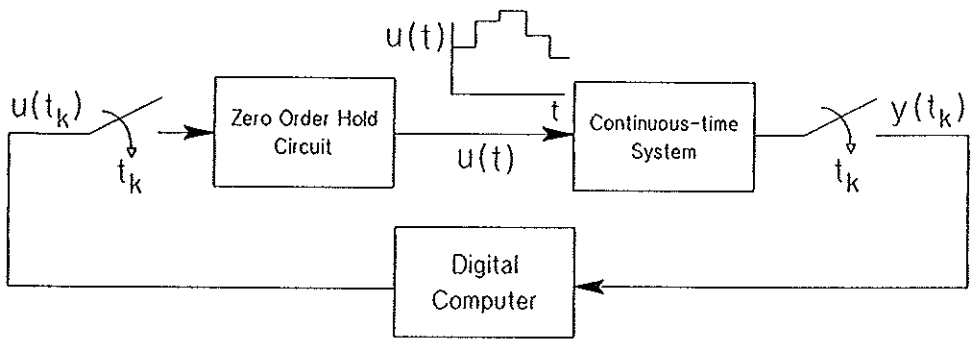

Figure 1: Digital Control System

The task sequence of the computer is represented by figure 2. At each sampling instant the computer has to activate a previously computed control and at the same time perform measurements. During the sampling interval the measurements performed have to be read and based on the result a new control has to be computed.

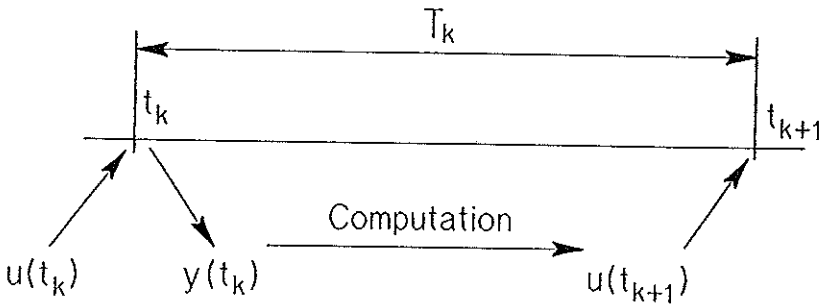

Figure 2: Task sequence of the computer

While other approaches solve digital control problems making approximations *we will solve the digital optimal control problems without making any approximations.* While other approaches only consider the behavior at the sampling instants (Ackermann 1985, Astrom and Wittenmark 1984, Franklin and Powell 1980) our approach *explicitly considers the inter-sample behavior.* Like the other approaches our approach explicitly considers the fact that we have *sampled-data* and that *the control is of piecewise constant nature.* Digital controllers that explicitly consider the inter-sample behavior were, for rather peculiar reasons, called *sampled-data controllers* (Levis Schlueter and Athans 1971, Halyo Caglayan 1976) since it is not the fact that they use sampled-data which distinguishes them. In this thesis we therefore prefer to call them *digital controllers* since *proper* digital controllers consider the continuous-time system behavior explicitly. In this case we are not forced to chose small sampling times and/or search for discrete-time cost criteria that result in a satisfactory continuous-time behavior, as is required by the other approaches. It is for instance frequently stated in the literature that

sampling times larger than 20 milliseconds are improper for manipulator control, since large errors and instability will occur (Luh, Walker and Paul, 1980, Vukobratovic and Stokic, 1982). In this thesis we will demonstrate that controllers with sampling times up to 200 milliseconds give accurate results when applied to an industrial two link cartesian manipulator that moves with speeds up to 1.5 meters per second.

The industrial two link cartesian manipulator, shown in figure 3, was part of a flexible experimental setup, represented by figure 4.

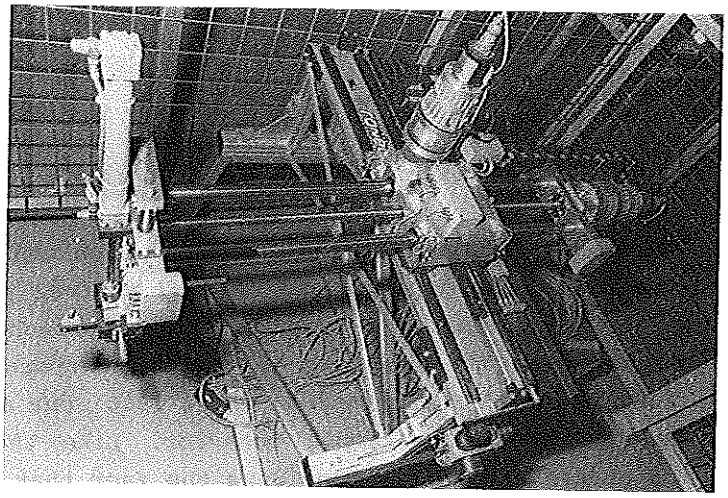

Figure 3

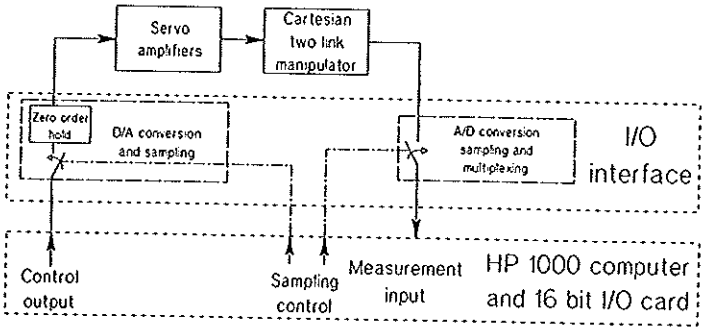

Figure 4: Schematic representation of experimental robot control system

We modified the servo amplifiers in such a way that the control is directly applied to the DC motor current controllers inside the servo amplifier. So we actually control the DC motor currents which are proportional to the torque or force applied to each link. The sampling instants of the measurements as well as those at the input of the servo amplifiers could be chosen arbitrarily, using the clock of the computer. This allows for the choice of different sampling intervals, even within one experiment, and also offers the possibility to monitor inter-sampling behavior. The choice entirely depends on the digital computer software, which also determines the digital control algorithm. So the only restrictions imposed on the digital control algorithm are the available outputs, i.e. the link positions and velocities, and the computational speed of the computer including the time it takes to read and write data from and to outside. Note that within one sampling interval data have to be both read and written. Although computers can generally write and read data very fast the time necesarry to put a computer into the write or read mode often exceeds sampling intervals for robot manipulators. A solution is to use I/O equipment which can be controlled by the computer via micro instructions. For instance in case of a PC many such I/O cards are available. In our case the 16 bits I/O card for the HP1000 computer offered the same possibility. Then the computational speed of the computer, together with computational demand of the control algorithm, determine the minimum length of the sampling interval.

2. General approach to the control problems

The optimal control approach has been motivated by the fact that manipulator dynamics are well known in principal. The dynamics are determined by the equations of motion of the manipulator, which in turn depend on the mass and moment of inertia of each link, and also gravity and friction. Although they can be computed from the mechanical design manipulator manufacturers are often unable to

quote the mass and moment of inertia of each link of a manipulator. Friction parameters generally cannot be computed from the design. They however can be obtained from relatively simple identification experiments (Marilier and Richard 1989). The reason why little effort has been taken to obtain the dynamic parameter values of manipulators is probably that they are still very often controlled by experimentally tuned individual PID controllers for each link (Craig 1986). However since the quality of control is primarily determined by the accuracy of the dynamic model on which it is based, we want to stress here that to achieve accurate and fast control it is of vital importance to obtain the dynamic parameter values. *Since accurate knowledge of the manipulator dynamics is of primary importance to achieve accurate and fast control, in this thesis we have made no approximations with regard to the, generally nonlinear, manipulator dynamics.* Often the nonlinear model is linearized and the influence of friction and gravity are neglected or regarded as disturbances (Guo and Koivo 1984, Tomizuka et al. 1988). *We always take into account gravity and friction and use linearized models only at the level of perturbation control.*

The digital controllers presented in this thesis are generally based on the idea of perturbation control (Athans 1971). The digital control system is schematically represented by figure 5.

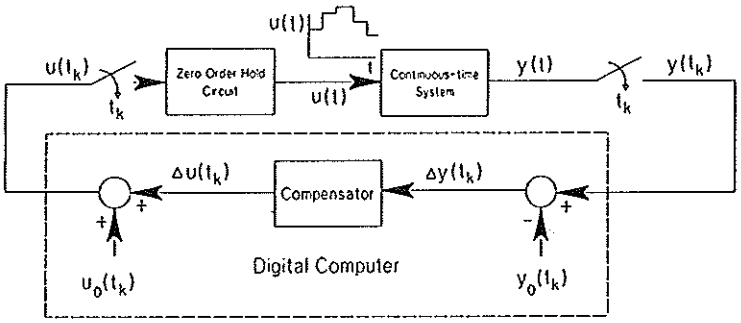

Figure 5: Digital control system
with a digital compensator
based on linearized dynamics

The digital perturbation controller, i.e. the compensator, consists of a linear optimal digital regulator and a discrete-time Kalman one step ahead predictor. It is based on a linear model, which may include additive white measurement and system noise, that approximately describes the dynamic behavior of small perturbations from a so called *ideal input-state response* $u_0(t)$, $x_0(t)$ which represents a desired admissible system behavior, often referred to as the *trajectory*. The linear optimal digital regulator is a feedback controller used to control deviations from the trajectory to zero. Usually a discrete-time linear optimal regulator is used which does not take into account the inter-sample behavior (Ackermann 1985, Astrom and Wittenmark 1984, Franklin and Powell 1980). *The linear optimal digital regulator, presented in this thesis, explicitly takes into account the inter-sample behavior. This allows for the choice of "large" sampling times which is very important in the case of manipulator control, since the computational burden on the computer is generally high.*

Since we consider digital control systems as represented by figure 2 the trajectory in this thesis consists of a *continuous-time state trajectory* $x_0(t)$ *generated by an admissible piecewise constant open loop control* $u_0(t)$ and usually is the outcome of an optimization problem. This optimization problem considers the generally nonlinear system dynamics and assumes them to be deterministic. Generally the optimization of the trajectory $u_0(t)$, $x_0(t)$ is performed assuming $u_0(t)$ to be a continuous-time control (Athans 1971, Lewis 1986).

3 Control problems considered in the thesis

In this thesis we will treat three types of control problems which often appear in practice. Since manipulators are often used for assembly a general objective is to operate manipulators in minimum time. The majority of assembly operations

performed by manipulators involve "point to point" motions. A point to point motion is characterized by a desired initial and final position of the links of the manipulator. Throughout this thesis *the individual link positions and speeds are chosen to be the state variables of rigid manipulators.* As already mentioned *the actuation forces and/or torques are considered to be the control variables.* These control variables are limited by a maximum and minimum value. Performing a pick and place operation in minimum time therefore comes down to *a time-optimal control problem with fixed initial and final state and bounded control.* This is one of the control problems treated in this thesis.

Many applications of industrial manipulators, such as spraying and cutting, are characterized by the fact that the manipulator motion is specified in space. More precisely we assume the individual positions of the links to be known as a function of a certain parameter, which does not represent time. This parameterization is called *a path.* The second problem treated in this thesis is *a time-optimal control problem with bounded control where the state is constrained to follow an arbitrary path.*

Finally we will treat *the tracking problem* where it is desired that the manipulator tracks a reference state trajectory. This reference state trajectory is determined by the desired individual link positions as a function of time, which may for instance be the outcome of the previous two problems. For some applications, such as welding, the reference state trajectory is known a priori.

Since we either assume the initial and final state, the reference state trajectory, or the path to be known in advance, *in this thesis we will not be concerned with problems concerning manipulator kinematics.* Manipulator tasks are initially specified through desired positions and orientations of the Tool Center Point of the manipulator. Kinematics are concerned with the problem of which individual link positions result in a certain

position and orientation of the Tool Center Point. Kinematics constitute transformations. Software to compute these complicated transformations is available nowadays and since we assume the manipulator task to be known in advance the kinematic transformations can be computed off-line. In our approach to manipulator control we are not faced with on-line computational problems regarding manipulator kinematics.

In this thesis we will concentrate on two specific manipulators. One is an industrial two link cartesian manipulator, the other a two link articulated arm manipulator. However, the control algorithms presented in this thesis can all be extended in a straightforward manner to manipulators with more links. The two link cartesian manipulator was part of a flexible experimental setup, characterized by the possibility to implement any kind of controller at the lowest level. *The experimental setup was used to test implemented control algorithms for cartesian manipulators.* The two link articulated arm manipulator was taken from the literature (Geering et al. 1986), and *simulations were performed to test control algorithms for articulated arm manipulators.*

4 Outline of the thesis

The thesis merges a collection of papers which have been published or have been submitted for publication in international journals concerned with control and/or robotics. The first chapter contains papers that present *new general results* necessary to solve the robot motion control problems treated in chapter 2 and 3. The first paper demonstrates the applicability of a perturbation controller, based on linearized dynamics, to control articulated arm manipulators. The concept of *first order controllability* is introduced. A system is first order controllable about a trajectory if the linearized dynamics about the trajectory constitute a differentially controllable linear system. A system is first order controllable if the linearized dynamics about any admissible trajectory constitute a

differentially controllable linear system. It is demonstrated that first order controllability is an important condition for the successful application of a continuous-time perturbation controller to control a nonlinear system about a trajectory. In chapter 3 it is argued that the same holds for *first order reconstructability*, which is the dual property. It is demonstrated that *rigid robot manipulators are first order controllable systems*, in chapter 3 that they are also *first order reconstructable systems*. Therefore we may successfully apply a perturbation controller based on linearized dynamics. Furthermore the concept of first order controllability is demonstrated to be closely related to singularity of the time-optimal control problem. The time-optimal control problem is treated in chapter 3.

The other papers in chapter 1 deal with the derivation and computation of *the digital optimal regulator and tracker for linear time-varying deterministic and stochastic systems.* The design and computation of digital optimal perturbation controllers for articulated arm manipulators, treated in chapter 3, is based on the digital optimal regulator result. The design of digital optimal controllers for cartesian manipulators, treated in chapter 2, is based on both the digital optimal regulator and tracker result.

Chapter 2 is concerned with the control of an industrial two link cartesian manipulator. The time-optimal control problem where the state has to follow an arbitrary path has already been solved in the literature (Bobrow, Dubowsky and Gibson, 1985, Shin and Mc Kay, 1986). In practice however, besides the bounds on the control variables, *upper and lower bounds on the individual link speeds have to be considered.* The first paper extends the solution to include these bounds. Furthermore for the first time it presents a detailed description of a numerical procedure to compute the solution for arbitrary paths, together with numerical examples. The second paper solves the tracking problem and presents results obtained with *implemented* digital optimal controllers. The paper

uses both the digital optimal regulator and tracker presented in chapter 1. The implemented controllers were computed for time-optimal reference state trajectories computed in the first paper. A number of experiments have demonstrated that a very simple method, proposed to solve the time-optimal control problem with fixed initial and final state, is very promising. This is left as a possible subject of further research.

Chapter 3 is concerned with the digital optimal control of a two link articulated arm manipulator. The first paper in chapter 3 treats the time-optimal control problem for nonlinear systems, linear in the control, with fixed initial and final state and bounded control. A numerical procedure is presented to compute non-singular time-optimal solutions satisfying Pontryagin's Minimum Principle, which constitutes necessary conditions for a time-optimal control. It is well known that solutions to non-singular time-optimal control problems with bounded control are bang-bang solutions, i.e. solutions where each control variable equals either its upper or lower limit at all times, except for the switch times, where it switches from one extreme value to the other. The first part of the numerical procedure consists of a numerical method that computes bang-bang solutions which transfer the system from the initial to the final state. The second part consists of *a new numerical test for non linear systems, linear in the control, which determines whether bang-bang solutions satisfy Pontryagin's Minimum Principle. The test reveals the new important fact that the probability for a bang-bang solutions with more than n-1 switches, where n is the dimension of the system, to satisfy Pontryagin's Minimum Principle, is almost zero.* Using this test it is demonstrated that some time-optimal solutions for a two link manipulator mentioned in the literature to satisfy Pontryagin's Minimum Principle (Geering et al. 1986) do not. A numerical procedure, based on control parameterization, is demonstrated to generate "near time-optimal solutions" for both singular and non-singular time-optimal control problems of a two link manipulator. This method also offers the possibility to take

into account upper and lower bounds on the individual link speeds. Finally numerical examples are presented. The second paper deals with the tracking problem. Based on the solution to the digital LQG regulator problem, presented in chapter 1, it treats *the design and computation of digital optimal compensators to control nonlinear uncertain systems about trajectories.* Numerical examples and *simulation* results for a two link manipulator are presented. The time-optimal control problem where the state has to follow an arbitrary path has already been solved in the literature (Bobrow, Dubowsky and Gibson, 1985, Shin and Mc Kay, 1986). It can be extended to include upper and lower bounds on the individual link speeds, as explained in chapter 2.

References

ATHANS M., 1971, 'The Role and Use of the Stochastic Linear Quadratic Gaussian Problem in Control System Design', IEEE Transactions on Automatic Control, AC-16, 6, 529-552.

ATHANS M., 1972, 'The Discrete Time Linear Quadratic Gaussian Problem', Annals of Economic and Social Measurement, 2, 1/4, 449-491.

BAYARD D.S., WEN J., 1988a, 'New class of control laws for robotic manipulators Part 1. Non-adaptive case', International Journal of Control, 47, 5, pp 1361-1385.

BAYARD D.S., WEN J., 1988b, 'New class of control laws for robotic manipulators Part 2. Adaptive case', International Journal of Control, 47, 5, pp 1387-1406.

BOBROW J.E., DUBOWSKY S., GIBSON J.S., 1985, 'Time-Optimal Control of Robotic Manipulators Along Specified Path', International Journal of Robotic Research, 4, 3, pp 3-17.

CRAIG J.J., 1986, Introduction to Robotics Mechanics and Control, Addison-Wesley.

GEERING H.P., GUZELLA L.,HEPNER S.A.R., ONDER C.H., 1986, 'Time-Optimal Motions of Robots in Assembly Tasks', IEEE Transactions on Automatic Control, AC-31, 6, pp 512-518.

GUO T.H., KOIVO A.J., 1984, 'On a Linearized Model and Adaptive

Controller Implementation for Manipulator Motion.
KHOSLA K.K., KANADE T., 1988, 'Experimental Evaluation of Nonlinear Feedback and Feedforward Control Schemes for Manipulators', Int. J. Rob. Res., 7, 1, 18-28.
LEONHARD W., 1985, Control of Electrical Drives, Springer Verlag
LEWIS F.L., 1986, Optimal Control, Wiley.
MARILIER T., RICHARD J.A., 1989, 'Non-linear mechanic and electric behavior of a robot axis with a "harmonic drive" gear', Robotics and Computer-Integrated Manufacturing, 5, 2/3, pp 129-136.
MILLS C.T.L., KURUVILA G., SINGH S.N., 1986, 'Trajectory control of a PUMA robot arm by inversion and servo compensation', Int. J. Contr., 17, 12, 1709-1725.
SHIN K.G., Mc KAY N., 1985, 'Minimum-Time Control of Robotic Manipulators with Geometric Path Constraints', IEEE Transactions on Automatic Control, AC-30, 6, pp 531-541.
TOMIZUKA M., HOROWITZ R., ANWAR G., JIA Y.L., 1988, 'Implementation of Adaptive Techniques for Motion Control of Robotic Manipulators', Trans. ASME J. Dyn. Syst. Meas. Contr., 110, 62-69.
VUKOBRATOVIC M., STOKIC D., 1982, Control of manipulation Robots: Theory and Application, Springer Verlag, Berlin.

CHAPTER 1

INT. J. CONTROL, 1990, VOL. 51, NO. 6, 1159–1171

First order controllability and the time optimal control problem for rigid articulated arm robots with friction

L. G. VAN WILLIGENBURG†

For non-linear systems, linear in the control, a relationship between the singularity of the time optimal control problem and the differential controllability of the linearized dynamics along a time optimal solution that satisfies the minimum principle is established. Known results concerning the solution of the time optimal control problem for a two link planar articulated arm robot without friction are extended to a general rigid articulated arm robot with friction. Finally, these results are used to prove differential controllability of the linearized dynamics (called first order controllability) along any trajectory of rigid articulated arm robots with friction.

1. Introduction

The production of an assembly line is determined by the speed of operation of parts operating in the line. If a robot is part of an assembly line its speed of operation may determine the production rate. The most common operation performed by robots is 'pick and place'. Therefore performing a pick-and-place operation in the minimal time is a very important robot motion control problem. This problem is a special case of the time optimal robot motion control problem with fixed initial and final states and with bounded control, which is treated here. In recent years, a number of articles on this problem have appeared. They can be divided into two categories. In one category, solutions are based on linear models (obtained in different ways under different assumptions) approximating the non-linear robot dynamics (Khan and Roth 1971, Kim and Shin 1985, Roodhart *et al.* 1987). In the other category, the 'true' non-linear dynamics of the rigid robot are considered (neglecting friction, however). Very often results are stated for the simplest articulated arm robot, i.e. a planar arm consisting of two links (Ailon and Langholz 1985, Sontag and Sussman 1985, Geering *et al.* 1986, Wen 1986).

Here we use the 'true' non-linear dynamics of a general articulated arm robot in which friction is modelled by possibly state dependent viscous and Coulomb forces. We show by simple proofs that results found in the literature (Ailon and Langholz 1985, Sontag and Sussman 1985, Wen 1986) concerning the existence and form of the solution to the time optimal control problem also apply to this general case. The paper first presents a relationship between the singularity of the time optimal control problem and the differential controllability of the linearized dynamics about a time optimal trajectory that satisfies the minimum principle. This relationship is finally used to prove that the linearized robot dynamics along any trajectory, are differentially controllable. This is a very important result since a general approach to control a non-linear system consists of controlling the system about an off-line-determined state trajectory and open-loop control, using a so-called perturbation controller

Received 27 February 1989.

† Delft University of Technology, Department of Applied Physics, Prins Bernhardlaan 6, 2628 BW Delft, The Netherlands.

(Athans 1971). The design of this perturbation controller is based on the linearized dynamics about the off-line-determined solution. The main condition to apply this approach successfully is that the linearized dynamics be differentially controllable, since this guarantees that all deviations from the trajectory can be controlled to zero in an arbitrarily small-time.

2. Deterministic non-linear minimum time problem with bounded control

We first consider a deterministic non-linear optimal control problem with bounded control. Given the non-linear system

$$\dot{\mathbf{x}} = f(\mathbf{x}, \mathbf{u}) \tag{1}$$

and the cost criterion to be minimized

$$J(t_0) = \Phi(\mathbf{x}(T), T) + \int_{t_0}^{T} L(\mathbf{x}, \mathbf{u})\, dt \tag{2}$$

the final state constraint

$$\psi(\mathbf{x}(T), T) = 0 \tag{3}$$

and bounds on the control

$$a_i \leqslant u_i \leqslant b_i \quad i = 1, \ldots, M \tag{4}$$

where M is the dimension of the control $\mathbf{u}$. The hamiltonian H of this problem is by definition

$$H(\mathbf{x}, \mathbf{u}) = L(\mathbf{x}, \mathbf{u}) + \lambda^{\mathrm{T}} f(\mathbf{x}, \mathbf{u}) \tag{5}$$

where λ is the costate. The minimum principle states that the optimal control minimizes the hamiltonian with respect to the control. We further consider the special case where the hamiltonian (5) is linear in the control, i.e. both $f(\mathbf{x}, \mathbf{u})$ and $L\ \mathbf{x}, \mathbf{u})$ are assumed to be linear in the control:

$$f(\mathbf{x}, \mathbf{u}) = f_1(\mathbf{x}) + f_2(\mathbf{x})\mathbf{u} \tag{6}$$

$$L(\mathbf{x}, \mathbf{u}) = L_1(\mathbf{x}) + L_2(\mathbf{x})\mathbf{u} \tag{7}$$

In this case, the hamiltonian equals

$$H = L_1 + \lambda^{\mathrm{T}} f_1 + (\lambda^{\mathrm{T}} f_2 + L_2)\mathbf{u} \tag{8}$$

To minimize the hamiltonian (8) with respect to $\mathbf{u}$ given the bounds (4) on the control, $\mathbf{u}$ should be selected as

$$u_i = a_i \quad \text{if } (\lambda^{\mathrm{T}} f_2 + L_2)_i > 0 \tag{9}$$

$$u_i = b_i \quad \text{if } (\lambda^{\mathrm{T}} f_2 + L_2) < 0 \tag{10}$$

The component u_i of the control vector $\mathbf{u}$ takes on either its maximum or minimum value dependent on the sign of the so-called corresponding switching function $(\lambda^{\mathrm{T}} f_2 + L_2)_i$. If the switching function equals zero for some time t, (9) and (10) do not determine the corresponding control variable. If this happens only at isolated time instants, the corresponding control variable may switch at these instants from its maximum to its minimum value, or vice versa. the problem is called *regular* in this case. When, on the other hand, a time interval exists during which one or several

switching functions equal zero, (9) and (10) no longer determine a meaningful solution. The problem is called *singular* in this case.

The problem in our case is a minimum time problem, so

$$L = 1 \tag{11}$$

and therefore

$$L_1 = 1 \tag{12}$$

$$L_2 = 0 \tag{13}$$

Given (7) and (13), the switching functions in (9) and (10) simplify to

$$(\lambda^{\mathrm{T}} f_2)_i \tag{14}$$

Definition 2.1

A minimum time problem, linear in the control, is called *singular in u_i over* (t_1, t_2), $t_1 < t_2$, if for all $t \in (t_1, t_2)$ the corresponding switching function (14) equals zero.

The linearization of (1) along a trajectory $\mathbf{x}(t)$, $t \in [0, T]$ is given by

$$\dot{\mathbf{x}}(t) = A(t)\,\mathbf{x}(t) + B(t)\,\mathbf{u}(t) \tag{15}$$

where

$$A(t) = \left.\frac{\partial f}{\partial \mathbf{x}}\right|_{\mathbf{x}=\mathbf{x}(t),\,\mathbf{u}=\mathbf{u}(t)} \tag{16}$$

$$B(t) = \left.\frac{\partial f}{\partial \mathbf{u}}\right|_{\mathbf{x}=\mathbf{x}(t),\,\mathbf{u}=\mathbf{u}(t)} \tag{17}$$

The system (15) represents the first order dynamics of (1) along the trajectory. The dynamics of small deviations from the trajectory can be very well approximated by these first order dynamics. Since the system (15) is fully determined by $A(t)$ and $B(t)$, one often refers to $A(t)$, $B(t)$ being the linearization of (1) about the trajectory. Note that if the system (1) is linear in the control, the linearization $A(t)$, $B(t)$ is independent of $\mathbf{u}(t)$, so it depends only on $\mathbf{x}(t)$.

Lemma 2.1

A non-linear minimum time problem, linear in the control, (6), (7), (8), (12), (13) is singular in u_i over (t_1, t_2), $t_1 < t_2$, if and only if for all $t \in (t_1, t_2)$ the following holds true:

$$-\dot{\lambda} = A^{\mathrm{T}}(t)\,\lambda \tag{18}$$

$$B_i^{\mathrm{T}}(t)\lambda = 0 \tag{19}$$

where $A(t)$, $B(t)$ is the linearization and $\lambda(t)$ the costate at time $t \in (t_1, t_2)$ for a time optimal trajectory satisfying the minimum principle. B_i is by definition the ith column of B.

Proof

Equation (18) is the costate equation of the minimum time problem which holds

everywhere along a time optimal trajectory satisfying the minimum principle. Equation (19) states that for time $t \in (t_1, t_2)$ the switching function corresponding to u_i equals zero. □

3. Differential controllability and reconstructibility of linear varying systems

To establish first order controllability of a non-linear system along a trajectory, we have to introduce a special kind of controllability for time varying systems called *differential controllability* (Chen 1970), or *full controllability* (Hermes and La Salle 1969). To show the analogy and differences between complete controllability, and differential controllability we first state the well-known definitions of complete controllability each followed by analogous definitions of differential controllability. Since, for a linear time varying system, reconstructibility is dual to controllability, we follow the same approach to introduce differential reconstructibility. All definitions refer to a general, finite dimensional linear time varying system (LTVS), given by

$$-\infty < t < +\infty \tag{20}$$

$$\dot{\mathbf{x}}(t) = A(t)\,\mathbf{x}(t) + B(t)\,\mathbf{u}(t) \tag{21}$$

$$\mathbf{y}(t) = C(t)\,\mathbf{x}(t) \tag{22}$$

Definition 3.1

An LTVS is called *completely controllable at time* t_1 if time t_2 exists such that $t_2 > t_1$, $t_2 - t_1$ is finite, and each state $\mathbf{x}(t_1)$ can be transformed to each $\mathbf{x}(t_2)$.

Definition 3.2

An LTVS is called *differentially controllable* at time t_1, if $t_2 - t_1$ can be made arbitrarily small, $t_2 > t_1$, and each state $\mathbf{x}(t_1)$ can be transferred to each $\mathbf{x}(t_2)$.

Definition 3.3

An LTVS is called *completely controllable* if it is completely controllable at each time t.

Definition 3.4

An LTVS is called *differentially controllable* if it is differentially controllable at each time t.

Definitions 3.1 and 3.3 constitute the well-known definition of complete controllability, which means that any state can always be transferred to any other state, or, equivalently, any state can be transferred to the zero state in finite time. Differential controllability means that any state can always be transferred to any other state in an arbitrary small amount of time. The above definitions hold for the LTVS (20), (21) and (22). However, definitions concerning differential controllability also apply to an LTVS which is defined over a finite time interval $t \in [t_s, t_f]$. In this case, t in Definition 3.4 is restricted to the interval $[t_s, t_f)$.

Lemma 3.1

If an LTVS is completely controllable but not differentially controllable, at least one time interval (t_1, t_2) exists where the LTVS is differentially controllable for no $t \in (t_1, t_2)$.

Proof

If the LTVS is completely but not differentially controllable, then, according to Definitions 3.3 and 3.4, there exists at least one time t_1 for which it takes a non-arbitrarily small, but finite, time to control all $\mathbf{x}(t_1)$ to zero. Consider the earliest time $t_2 > t_1$ for which all states $\mathbf{x}(t_1)$ can be controlled to zero, and the time interval (t_1, t_2). So there must be at least one state $\mathbf{x}'(t_1)$ that can be transferred to zero no sooner than t_2. Consider the transfer $\mathbf{x}'(t), t \in [t_1, t_2]$ of $\mathbf{x}'(t_1)$ to $\mathbf{x}'(t_2) = 0$. Clearly, for all $t \in (t_1, t_2)$ $\mathbf{x}'(t) \neq 0$ and cannot be controlled to zero sooner than t_2, so not in an arbitrarily short time. □

Considering Lemma 3.1, we state the following definition.

Definition 3.5

The LTVS is called *differentially uncontrollable over* (t_1, t_2) if for all $t \in (t_1, t_2)$ the LTVS is not differentially controllable.

Lemma 3.2

For an LTVS, the possibility to control $\mathbf{x}(t_1)$ to $\mathbf{x}(t_2) = 0$ is equivalent to the possibility of controlling $\alpha \cdot \mathbf{x}(t_1)$ to $\mathbf{x}(t_2) = 0$, α real and bounded.

Proof

Consider the response of the LTVS to $\mathbf{u}(\tau)$, $\tau \in [t_1, t_2]$

$$\mathbf{x}(t_2) = \Phi(t_2, t_1)\mathbf{x}(t_1) + \int_{t_1}^{t_2} \Phi(t_2, t_1)B(\tau)\mathbf{u}(\tau)\, d\tau \tag{23}$$

Clearly the transfer $\mathbf{x}(t_1)$ to $\mathbf{x}(t_2) = 0$ being realized by $\mathbf{u}(\tau)$ is equivalent to the transfer of $\alpha \cdot \mathbf{x}(t_1)$ to $\mathbf{x}(t_2) = 0$ being realized by $\alpha \cdot \mathbf{u}(\tau)$. □

Lemma 3.3

Consider again the time interval (t_1, t_2) in Lemma 3.1. For each $t \in (t_1, t_2)$, the earliest time for which all states $x(t)$, $\|x(t)\| \leqslant \varepsilon$, $\varepsilon > 0$ and small, i.e. all states in a neighbourhood of the zero state, can be controlled to the zero state, is t_2.

Proof

Lemma 3.1, and Lemma 3.2 for small enough α, imply Lemma 3.3. □

Lemma 3.3 reveals an important property of an LTVS that is completely but not differentially controllable. For such a system there always exists a time interval (t_1, t_2) during which it is impossible to control any state in the neighbourhood of the zero state, or equivalently any other state, to that state. Loosely speaking, the LTVS is temporarily uncontrollable.

It is well known that the controllability of an LTVS is equivalent to reconstructibility of the dual system

$$\dot{\mathbf{x}}(t) = A^{\mathrm{T}}(t^* - t) + C^{\mathrm{T}}(t^* - t)\mathbf{u}(t) \tag{24}$$

$$\mathbf{y}(t) = B^{\mathrm{T}}(t^* - t)\mathbf{x}(t) \tag{25}$$

This suggests the possibility of introducing differential reconstructability dual to differential controllability.

Definition 3.6

An LTVS is called *completely reconstructible at time* t_2 if $t_1 < t_2$ exists such that $\mathbf{u}(t) = 0$, $\mathbf{y}(t) = 0$, $t_1 < t < t_2$ implies $\mathbf{x}(t_1) = 0$, and $t_2 - t_1$ is finite.

Definition 3.7

An LTVS is called *differentially reconstructible at time* t_2 if $t_2 - t_1$ can be made arbitrarily small, $t_1 < t_2$, such that $\mathbf{u}(t) = 0$, $\mathbf{y}(t) = 0$, $t_1 < t < t_2$ implies $x(t) = 0$.

Definition 3.8

An LTVS is *completely reconstructible* if it is reconstructible for all time t.

Definition 3.9

An LTVS is *differentially reconstructible* if it is differentially reconstructible for all time t.

Analogous to Definition 3.5, we introduce differential unreconstrucibility dual to differential uncontrollability.

Definition 3.10

An LTVS is *differentially unreconstructible over* (t_1, t_2) if for all $t \in (t_1, t_2)$ the LTVS is not differentially reconstructible.

Definitions 3.6 and 3.8 are based on a theorem concerning complete reconstructibility for an LTVS (Kwakernaak and Sivan 1972). Complete reconstructibility means that measurements over a finite time interval in the past always completely determine the current state. Differential reconstructibility means that measurements over an arbitrarily small time interval in the past completely determine the current state. Since aspects of controllability and reconstructibility for linear time varying systems are completely determined by the controllability and reconstructibility gramian, which for the LTVS and its dual system are the same (Johnson 1985), it can easily be seen that differential controllability is indeed dual to differential reconstructibility, as defined above.

Lemma 3.4

If for all $t \in (t_1, t_2)$, the following hold:

$$\mathbf{x}(t) \neq 0 \tag{26}$$

$$B^{\mathrm{T}}(t)\mathbf{x}(t) = 0 \tag{27}$$

$$\dot{\mathbf{x}}(t) = A^{\mathrm{T}}(t)\mathbf{x}(t) \tag{28}$$

then the system $A(t)$, $B(t)$ is differentially uncontrollable, and equivalently the dual system $B^{\mathrm{T}}(t)$, $A^{\mathrm{T}}(t)$ differentially unreconstructible over (t_1, t_2).

Proof

For all $t \in (t_1, t_2)$ we may consider an interval $(t, t+\varepsilon)$, $t+\varepsilon \leqslant t_2$ within (t_1, t_2). So, (20), (21), (22) hold over $(t, t+\varepsilon)$, which by Definitions 3.7 and 3.9 implies that, for all $t \in (t_1, t_2)$, $B^{\mathrm{T}}(t)$ and $A^{\mathrm{T}}(t)$ are not differentially reconstructible. Hence, by Definition 3.10, this implies Lemma 3.4. □

4. First order controllability of a non-linear system along a trajectory

Consider the system (6), which is linear in the control, with given initial state, and bounded control.

$$\mathbf{x}(0) = \mathbf{x}_0 \tag{29}$$

$$\mathbf{u}(t) \in U \tag{30}$$

Define the attainable set $\Omega(\mathbf{x}_0, T)$ from $\mathbf{x}_0$ consisting of all solutions to (6), (29), (30) for some finite time T

$$\Omega(\mathbf{x}_0, T) = \{\mathbf{x}(t) \text{ solves (6), (29), (30)}, 0 < t < T < \infty\} \tag{31}$$

The formula $\Omega(\mathbf{x}_0, T)$ can be considered both as the set of all possible trajectories $\mathbf{x}(t)$, $t \in [0, T]$, $\mathbf{x}(0) = \mathbf{x}_0$ and as the set of states $\mathbf{x}$ that can be reached from $\mathbf{x}_0$ within time T.

Consider the linearization (16), (17) along any trajectory from $\Omega(\mathbf{x}_0, T)$.

Definition 4.1

Any trajectory from $\Omega(\mathbf{x}_0, T)$ is called *first order controllable* if the linear time varying system $A(t)$, $B(t)$, $t \in [0, T]$ determined by the linearization about the trajectory $\mathbf{x}(t)$, is differentially controllable.

A well-known approach to control a non-linear system is to use a linear perturbation controller to control the system about an off-line determined trajectory and open-loop control. The perturbation controller has a design based on a first order approximation of the non-linear dynamics, i.e. the linearization (16), (17) about the trajectory (Athans 1971). The main condition for successfully applying this approach is that this linearization, which constitutes a time varying linear system, is differentially controllable. For this implies any deviation can be controlled to zero in an arbitrarily short time. We use the term first order controllability since controllability along a trajectory is defined using the complete non-linear dynamics (Hermes 1976). Sufficient conditions for controllability along a trajectory are presented in this paper. They coincide with what we call first order controllability. First order controllability, therefore, implies controllability along a trajectory.

Definition 4.2

Any trajectory from $\Omega(\mathbf{x}_0, T)$ is called *first order controllable from* u_i if the time varying linear single input system $A(t)$, $B_i(t)$ is differentially controllable, where $A(t)$, $B(t)$ is the linearization about the trajectory and i again refers to the ith column.

The definition refers to first order controllability only if u_i is used to control the system about the trajectory. Since u_i in general is not the only control variable, the trajectory being first order uncontrollable from u_i does not mean the trajectory is

first order uncontrollable. For it can be first order controllable from another, or a combination of other, control variables. If, however, the trajectory is first order controllable from one of the control variables, it is first order controllable.

Definition 4.3

The linear time varying system $A(t), B(t), t \in [0, T]$ is called *differentially uncontrollable from u_i over* (t_1, t_2), $0 < t_1 < t_2 < T$ if $A(t), B_i(t)$ is differentially uncontrollable, over (t_1, t_2) where i refers to the ith column of B.

As we can see from Lemma 2.1 and Lemma 3.4, the conditions for the linearized system to be differentially uncontrollable from u_i over (t_1, t_2) are almost the same as for the minimum time problem to be singular in u_i over (t_1, t_2). There is a sign difference between (18) and (28) which is, however, unimportant, since the controllability of $A(t), B(t)$ is equivalent to the controllability of $-A(t), B(t)$. Furthermore it can be proved (Sage and White 1977) that, for a minimum time problem that is linear in the control with fixed initial and final states,

$$H \equiv 0 \tag{32}$$

everywhere along a time optimal trajectory that satisfies the minimum principle.

Given (5), (11) we can write the following general expression for the hamiltonian:

$$H = 1 + \lambda^{\mathrm{T}} f \tag{33}$$

Given (32), (33) everywhere along a time optimal trajectory

$$\lambda \neq 0 \tag{34}$$

which matches the condition $\mathbf{x}(t) \neq 0$ in Lemma 3.4.

Theorem 4.1

A minimum time problem, linear in the control, with fixed initial and final states being singular in u_i over (t_1, t_2), $t_1 < t_2$, along a time optimal trajectory satisfying the minimum principle, is equivalent to the locally linearized system about the time optimal trajectory being differentially uncontrollable from u_i over (t_1, t_2).

Theorem 4.1 states that the conditions stated in Lemma 2.1 and Lemma 3.4 are in fact equivalent, as we have shown. The only difference is that Lemma 3.4 refers to any trajectory, and so to all sets $\Omega(\mathbf{x}_0, T)$ defined by (29), (30), (31), for all T and $\mathbf{x}_0$. Lemma 3.4 refers only to time optimal trajectories which, within each $\Omega(\mathbf{x}_0, T)$, form a subset. This is also reflected by the fact that λ in Lemma 2.1 is the costate resulting from the minimum time problem, whereas $\mathbf{x}$ in Lemma 3.4 may be any state.

5. Time optimal control problem and first order controllability for articulated arm robots with friction

The dynamics of an N link articulated arm robot manipulator without friction can be written (Craig 1986) as

$$\tau = M(\theta)\ddot{\theta} + V(\theta, \dot{\theta}) + G(\theta) \tag{35}$$

where

$$\theta = (\theta_1 \quad \theta_2 \quad \dots \quad \theta_N)^{\mathrm{T}}, \quad = (\tau_1 \quad \tau_2 \quad \dots \quad \tau_N)^{\mathrm{T}}$$

$\theta_1, \ldots, \theta_N$ are the joint angles of the links and $\tau_1, \ldots, \tau_N$ are the actuation torques. $M(\theta)\ddot{\theta}$ represents the inertial forces where M is an $N \times N$ positive definite mass matrix dependent on link positions. $V(\theta, \dot{\theta})$ is an $N \times 1$ vector dependent on link positions and speeds representing centrifugal and Coriolis forces. $G(\theta)$ is an $N \times 1$ vector depending on link positions representing gravity forces. The actuation torques are considered to be the control variables of the system. If for instance the robot is actuated by current controlled DC motors, and we neglect flexibility and play in the transmission, the motor current is proportional to the actuation torque. Equation (35) is a non-linear system with a natural choice of state vector being $(\theta^T, \dot{\theta}^T)^T$. Friction effects generate damping forces dependent on the positions and speeds of the links. This means all friction effects can be modelled in (35) by introducing a term $\mathbf{F}$ on the right-hand side dependent on θ and $\dot{\theta}$ (Craig 1986).

$$\tau = M(\theta)\ddot{\theta} + V(\theta, \dot{\theta}) + G(\theta) + F(\theta, \dot{\theta}) \tag{36}$$

We can represent the terms V, G, F in (36) by a single term T dependent on θ and $\dot{\theta}$

$$\tau = M(\theta)\ddot{\theta} + T(\theta, \dot{\theta}) \tag{37}$$

Equation (37) is merely a symbolic notation which gives information about the general form of the dynamics of a rigid articulated arm manipulator with friction. However, in the rest of the paper it proves to be sufficient to use the simple form (37) without exact knowledge of the dynamics. To analyse the problem we first write (37) in state space form. Since $M(\theta)$ is positive definite, (37) can be written as

$$\ddot{\theta} = M^{-1}(\theta)[\tau - T(\theta, \dot{\theta})] \tag{38}$$

Introducing

$$\mathbf{x}_1 = \theta \tag{39}$$

$$\mathbf{x}_2 = \dot{\theta} \tag{40}$$

$$\mathbf{x} = \begin{bmatrix} \mathbf{x}_1 \\ \mathbf{x}_2 \end{bmatrix} \tag{41}$$

$$B = M^{-1}(\theta) \tag{42}$$

$$\mathbf{u} = \tau \tag{43}$$

we can write (38) in state space form using (39), ..., (43)

$$\dot{\mathbf{x}}_1 = \mathbf{x}_2 \tag{44}$$

$$\dot{\mathbf{x}}_2 = -B(\mathbf{x}_1)T(\mathbf{x}) + B(\mathbf{x}_1)\mathbf{u} \tag{45}$$

If we partition the costate vector according to (41), the hamiltonian for the system (44), (45) equals

$$H = 1 + \lambda_1^T\mathbf{x}_2 + \lambda_2^T[-B(\mathbf{x}_1)T(\mathbf{x}) + B(\mathbf{x}_1)\mathbf{u}] \tag{46}$$

and the costate equation is partitioned as

$$-\dot{\lambda}_1 = \partial[\lambda_1^T\mathbf{x}_2 - \lambda_2^T B(\mathbf{x}_1)T(\mathbf{x}) + \lambda_2^T B(\mathbf{x}_1)\mathbf{u}]/\partial\mathbf{x}_1 \tag{47}$$

$$-\dot{\lambda}_2 = \partial[\lambda_1^T\mathbf{x}_2 - \lambda_2^T B(\mathbf{x}_1)T(\mathbf{x}) + \lambda_2^T B(\mathbf{x}_1)\mathbf{u}]/\partial\mathbf{x}_2 \tag{48}$$

We can rewrite (47), (48) given the facts that $\partial[\lambda_1^T\mathbf{x}_2]/\partial\mathbf{x}_1 = 0$, $\partial[\lambda_2^T B(\mathbf{x}_1)\mathbf{u}]/\partial\mathbf{x}_2 = 0$

and $\partial[\lambda_1^T x_2]/\partial x_2 = \lambda_1$

$$-\dot{\lambda}_1 = [\partial[B(x_1)(u-T(x))]/\partial x_1]^T\lambda_2 \tag{49}$$

$$-\dot{\lambda}_2 = \lambda_1 - [\partial[B(x_1)T(x)]/\partial x_2]^T\lambda_2 \tag{50}$$

We now state and prove a theorem concerning the form of the solution to the time optimal robot motion control problem.

Theorem 5.1

There is no time interval where the time optimal robot motion control problem with fixed initial and final states, given a general rigid articulated arm robot with friction described by (44), (45), is singular in all control variables.

Proof

If the problem is singular in all control variables over some time interval, then the switching functions must all equal zero over this time interval so (19) holds for all i. This is equivalent to

$$B^T\lambda = 0 \tag{51}$$

which for the system (44), (45) by inspection of (46) means

$$B^T(x_1)\lambda_2 = 0 \tag{52}$$

Since M in (36) is positive definite, given (41), $B(x_1)$ is positive definite so (45) can only hold if $\lambda_2 = 0$. If $\lambda_2 = 0$ over the time interval, then $\dot{\lambda}_2 = 0$ which, given (49) and (50), implies $\lambda_1 = 0$. This contradicts (33). □

The theorem states that in any time interval the solution to the minimum time problem is almost everywhere non-singular in at least one control variable. So, in any time interval almost everywhere, at least one control variable takes on an extreme value. This result has also been obtained by Ailon and Langholz (1985), Sontag and Sussman (1985), and Wen (1986). Theorem 4.1 states that if the problem is singular in some control variable over (t_1, t_2), this is equivalent to the linearized system being differentially uncontrollable from that control variable over (t_1, t_2). We can therefore derive an equivalent result concerning the first order controllability of time optimal trajectories. From the proof of Theorem 4.1 we see that along any time optimal trajectory satisfying the minimum principle, no time intervals exist where (51) holds. However, by inspection of Lemma 3.1 this implies that any time optimal trajectory satisfying the minimum principle is first order controllable. Since, for almost all time, the minimum time problem is non-singular in at least one control variable, equivalently the linearized system about a time optimal trajectory is differentially controllable from at least one control variable. It is natural to wonder if these results can be extended to all trajectories, i.e. to all sets $\Omega(x_0, T)$, defined by (20), ..., (22), for all T and x_0.

Theorem 5.2

For all rigid articulated arm robots with friction, described by (44), (45), any trajectory, i.e. any $x(t)$, $t \in [0, T]$, $T < \infty$, is first order controllable. Even stronger, for each time $t \in [0, T)$ the linearized system about any trajectory is differentially controllable from at least one control variable.

Proof

In the proof of Theorem 4.1, we have not made explicit use of the fact that λ is the costate of a minimum time problem. In fact λ may be any state which, given Theorem 4.1, implies Theorem 5.2. □

Theorem 5.2 states that for each time t along any trajectory, using just one control variable it is already sufficient to control the linearized system about the trajectory to a full neighbourhood in an arbitrarily short time. We have proved for general rigid articulated arm manipulators with friction described by (44), (45), that the main condition for successfully applying a perturbation controller design, based on linearized dynamics, is fulfilled.

Until now we have assumed that a solution to the minimum time problem exists. Ailon and Langholz (1985), prove this for a two link planar robot using Roxin's theorem. Another proof, given by Wen (1986), again for a two link planar robot, is based on Fillipov's theorem (Hermes and La Salle 1969). In both cases the result is that a time optimal solution exists if, and only if, the robot is able to move from the initial to the final state in some finite time. If neither the initial or final states violate the physical constraints of the robot, any robot will be designed to be capable of doing so, and the existence of the solution is guaranteed. We also prove the result using Fillipov's theorem; however, in this case we prove it in conjunction with an examination of the kinetic energy of a general rigid articulated arm robot with friction.

Theorem 5.2 (Fillipov's theorem, Hermes and La Salle 1969)

Take the system (6), with (29), (30) holding, where $\mathbf{x}_0$ is the fixed initial state of a minimum time problem. Define the set

$$R(\mathbf{x}) = \{f(\mathbf{x}, \mathbf{u}), \mathbf{u}(t) \in U\} \tag{53}$$

for any

$$\mathbf{x} \in \Omega(\mathbf{x}_0, T) \tag{54}$$

the attainable set from $\mathbf{x}_0$ for time $T < \infty$ defined in (31). If $f(\mathbf{x}, \mathbf{u})$ is continuous in $\mathbf{x}$ and $\mathbf{u}$, $R(\mathbf{x})$ is convex for all $\mathbf{x}$, the set U given by (30) is non-empty and compact, and $\Omega(\mathbf{x}_0, T)$ is bounded, then $\Omega(\mathbf{x}_0, T)$ is compact.

It can be proved (Hermes and Lasalle 1969) that if the conditions of Fillipov's theorem are satisfied and for some T, $0 < T < \infty$

$$\mathbf{x}_f \in \Omega(\mathbf{x}_0, T) \tag{55}$$

where $\mathbf{x}_f$ is the fixed final state of the minimum time problem, then a time optimal control for this problem exists. The system (44), (45) is continuous in $\mathbf{x}$ and $\mathbf{u}$, U is determined by (4) and so it is non-empty and compact. Since the system (44), (45) is linear in the control, $R(\mathbf{x})$ is convex. We now prove that trajectories cannot finitely escape, which is a sufficient condition for $\Omega(\mathbf{x}_0, T)$ to be bounded. This, then, completes the proof of the existence of a time optimal control for a general articulated arm robot with friction given by (44), (45) if (55) holds.

Consider the general expression for the kinetic energy V of a mechanical system:

$$0{\cdot}5V = \dot{\mathbf{x}}^{\mathrm{T}} M \dot{\mathbf{x}} \tag{56}$$

where $\mathbf{x}$ consists of generalized coordinates and M is a positive definite mass matrix

(Meirovitch 1970). The joint angles of a rigid articulated arm robot are generalized coordinates. So for the system (44), (45) $\mathbf{x}_1$ are generalized coordinates and the kinetic energy of this system can be represented by

$$0{\cdot}5V = \mathbf{x}_2^{\mathrm{T}} M \mathbf{x}_2 \tag{57}$$

where M is some positive definite mass matrix. Since a mechanical system cannot contain infinite energy, for all time the kinetic energy of such a system is bounded. We prove that V in (57) being bounded is equivalent to all components of $\mathbf{x}_2$ being bounded. Since, according to (44) and (55), the components of $\mathbf{x}_1$ are finite time integrals of the components of $\mathbf{x}_2$, they are also bounded, which means that all components of the state vector $\mathbf{x}$ of the system (44) and (45) are bounded. This implies trajectories do not finitely escape.

So we are left to prove that if V is bounded, all components of $\mathbf{x}_2$ are bounded. We need the following result.

Given a general quadratic expression

$$\mathbf{x}^{\mathrm{T}} Q \mathbf{x} = \sum_{i=1}^{N} \sum_{j=1}^{N} q_{ij} x_i x_j \tag{58}$$

where Q is an N square matrix with elements q and $\mathbf{x}$ an N dimensional vector with element x, then there always exists a non-singular matrix T such that

$$\mathbf{x}^{\mathrm{T}} Q \mathbf{x} = \sum_{i=1}^{N} \alpha_i y_i^2 \tag{59}$$

with

$$\mathbf{y} = T\mathbf{x} \tag{60}$$

and furthermore, if $Q > 0$ then $\alpha_i > 0$ for all i.

Since M in (57) is positive definite

$$0{\cdot}5V = \mathbf{x}_2^{\mathrm{T}} M \mathbf{x}_2 = \sum_{i=1}^{N} \alpha_i y_i^2 \tag{61}$$

with $\alpha_i \geqslant 0$ for all i. Since the kinetic energy V is bounded, and α_i is bounded for all i, this implies y_i^2 is bounded, which implies y_i is bounded for all i. Since T in (60) is non-singular, (60) is equivalent to

$$\mathbf{x} = T^{-1}\mathbf{y} \tag{62}$$

Since the elements of T and therefore T^{-1} are bounded, this implies all elements of $\mathbf{x}_2$ are bounded.

Summarizing, we have proved that for a general rigid articulated arm robot with friction described by (44) and (45), a time optimal control exists if (55) holds. This is the case if, from the initial state, the final state can be reached in some finite time. This is always the case in practical situations. Considering the form of the time optimal solution, we have proved that for almost all time at least one control variable takes on an extreme value. Finally, we have derived the very important result that any trajectory is first order controllable.

References

Ailon, A., Langholtz, G., 1985, On the existence of time-optimal control of mechanical manipulators. *Journal of Optimization Theory and Applications*, 46, 1–20.

ATHANS, M., 1971, The role and use of the stochastic linear-quadratic-gaussian problem in control system design. *I.E.E.E. Transactions on Automatic Control*, **16**, 529–552.

CHEN, C. T., 1970, *Introduction to Linear Systems Theory* (New York: Holt, Rinehart and Winston Series).

CRAIG, J., 1986, *Introduction to Robotics* (Addison-Wesley).

GEERING, H. P., GUZELLA, L., HEPNER, S. A. R., and ONDER, C. H., 1986, Time-optimal motions of robots in assembly tasks. *I.E.E.E. Transactions on Automatic Control*, **31**, 512–518.

HERMES, H., 1976, Local controllability and sufficient conditions in singular problems. *Journal of Differential Equations*, **20**, 213–232.

HERMES, H., and LA SALLE, J. P., 1969, *Functional Analyses and Time-Optimal Control* (New York: Academic Press).

JOHNSON, A., 1985, *Process Dynamics Estimation and Control* (Peter Peregrinus).

KAHN, M. E., and ROTH, B., 1971, The near minimum-time control of open loop articulated kinematic chains. *Journal of Dynamic Systems Measurement and Control*, **93**, 164–172.

KIM, B., and SHIN, K. C., 1985, Suboptimal control of industrial manipulators with a weighted minimum time–fuel criterion. *I.E.E.E. Transactions on Automatic Control*, **30**, 1–10.

KWAKERNAAK, H., and SIVAN, R., 1972, *Linear Optimal Control Systems* (London: Wiley).

LEWIS, F. L., 1986, *Optimal Control* (London: Wiley).

MEIROVITCH, 1970, *Methods of Analytical Dynamics* (McGraw-Hill).

ROODHART, H., LOHNBERG, P., and NIJMEYER, H., 1987, On the suboptimal control of two-link horizontal arms with friction. Internal Report 88R011, Department of Electrical Engineering, University of Twente, The Netherlands.

SAGE, P., and WHITE, A., 1977, *Optimum Systems Control* (Englewood Cliffs, NJ: Prentice Hall).

WEN, J., 1986, *Recent Trends in Robotics* (Elsevier).

L.G. VAN WILLIGENBURG, W.L. DE KONING

THE DIGITAL OPTIMAL REGULATOR AND TRACKER FOR DETERMINISTIC TIME-VARYING SYSTEMS

Abstract

The general approach to solve digital control problems is to *approximate* them by discrete-time control problems. In this paper the digital control problems are solved without making any approximation, i.e. using *continuous-time* quadratic criteria. The regulator and tracking problem are solved where the continuous-time system is deterministic and time-varying. The control is piecewise constant and complete state information is available at the sampling instants. In a companion paper we solve the regulator and tracking problem in the case of stochastic systems and incomplete state information. In both cases the solutions are in feedback form and generated by a Riccati type recursion which runs backward in time. In case of the tracking problem the feedforward control component is also generated by a recursion that runs backward in time. The *numerical computation* of the solutions is *not* straightforward since the recursions demand the computation of integrals involving the state transition matrix of time-varying systems. In a third paper *numerical procedures* to compute the solutions are presented.

Keywords digital control, regulator, tracker, quadratic criteria, continuous linear time-varying systems.

1. Introduction

In many practical situations we are faced with a continuous-time plant, controlled by a digital computer. It is common practice to *approximate* the associated digital control problems by discrete-time control problems which only consider the system behavior at the sampling instants (Ackermann 1985). In these cases

the inter-sample behavior is completely disregarded. Two main disadvantages of this approach should be mentioned. The sampling time has to be chosen small enough to prevent undesirable inter-sample behavior. For instance in the case of robot control, where the computational burden on the computer is high, this presents a serious limitation. Furthermore a discrete-time criterion has to be searched for, which leads to a satisfactory continuous-time behavior. Both the choice of this criterion and the choice of the sampling time are often reported to be a problem (Franklin and Powell 1980, Astrom and Wittenmark 1984). In this paper the digital control problems are solved without making any approximations since we consider *continuous-time criteria*.

We will solve the digital optimal regulator and tracking problem, i.e. problems involving a continuous-time linear system with piecewise constant control and a *continuous-time quadratic criterion*. In the sequel of the paper the terms regulator and tracking problem refer to these type of problems. We assume the system to be deterministic and the availability of complete state information at the sampling instants. In a companion paper (Van Willigenburg and De Koning 1990) we solve the problems for stochastic systems and incomplete state information. These problems turn out to be certainty equivalent so we may use the results of this paper where the state is replaced by its estimate.

Levis, Schlueter and Athans (1971) and De Koning (1980) have treated the *regulator problem* for time-invariant systems. Halyo and Caglayan (1976) have treated the regulator problem for time-varying systems, but did not specify a numerical solution. The time-varying case is important, for instance if we want to design a digital perturbation controller, based on linearized dynamics, for a non linear system that tracks a reference trajectory e.g. a robot manipulator performing a prescribed movement. The linearized dynamics in this case constitute a *time-varying* system.

Van Willigenburg (1989) treated the *tracking problem* for

time-invariant systems, using a fourier approximation of the reference trajectory to turn the problem into a regulator problem. To accurately approximate the reference trajectory one often needs a large number of fourier coefficients. Since the dimension of the regulator problem is proportional to the number of fourier coefficients, the method very often becomes impractical from a computational point of view. Besides Van Willigenburg (1989) the only work the author is aware of that treats the tracking problem is presented by Nour Eldin (1971). He treats both the regulator and tracking problem for time-varying systems. His approach to the problems differs from the previous ones in that the problems are treated as static optimization problems in stead of dynamic ones. This is possible since the piecewise constant constraint on the control leads to a finite dimensional control space if the horizon of the problem is finite. From a computational point of view this approach is impractical especially if the horizon of the problem gets large.

It is believed that this is the first time *both* the regulator and tracking problem for time-varying systems are solved treating them as dynamic optimization problems. This approach appears to be numerically attractive since the solutions are determined by a Riccati type recursion that runs backward in time and, in case of the tracking problem, a feedforward control component given by another recursion that runs backward in time. The *numerical computation* of these recursions however is *not* straightforward in case of time-varying systems. The recursions contain terms that demand the computation of integrals involving the state-transition matrix. The numerical computation of these integrals has only been considered for time-invariant systems (Van Loan 1978). In a third paper (Van Willigenburg 1990) we will deal with this problem and present *numerical procedures* to calculate the solution to the regulator and tracking problem.

The outline of the paper is as follows. In section 2 we state the regulator and tracking problem. In section 3 we present solutions based on static optimization to illustrate their numerical

disadvantages. Section 4 contains the main result, i.e. the solutions based on dynamic optimization. Conclusions are presented in section 5.

2. The regulator and tracking problem

Consider the continuous-time linear time-varying system

$$\dot{x}(t) = A(t)\, x(t) + B(t)\, u(t), \tag{1a}$$

where A(t) and B(t) are the system matrices. The control is piecewise constant, i.e.

$$u(t) = u(t_k), \qquad t\in[t_k, t_{k+1}), \qquad k=0,1,2,3\ldots, \tag{1b}$$

where t_k are the, not necessarily equidistant, sampling instants. We assume complete state information at the sampling instants, so $x(t_k)$, $k=0,1,2,3,\ldots$ are available.

The *regulator problem* for this system is to minimize

$$J = \int_{t_0}^{t_f} [x^T(t)\, Q(t)\, x(t) + u^T(t)\, R(t)\, u(t)]\, dt + x^T(t_f)\, H\, x(t_f) \Big), \tag{2}$$

where $Q(t)\geq 0$, $H\geq 0$ and $R(t)>0$. We will pay special attention to situations where $R(t)\geq 0$. Furthermore

$$t_f = t_N, \tag{3}$$

where N is a positive integer.

The *tracking problem* takes the following form. Given the system (1) and a reference trajectory

$$x_r(t), \qquad t_0 \leq t \leq t_f, \tag{4}$$

minimize

$$J = \int_{t_0}^{t_f} [(x(t)-x_r(t))^T Q(t) (x(t)-x_r(t)) + u^T(t) R(t) u(t)] dt + (x(t_f) - x_r(t_f))^T H (x(t_f) - x_r(t_f)) \tag{5}$$

where again (3) holds and we assume $Q(t)\geq 0$, $H\geq 0$ and $R(t)>0$. Again we we will pay special attention to situations where, $R(t)\geq 0$.

3. Solutions to the regulator and tracking problem via static optimization

The solution to both the regulator and tracking problem is uniquely determined by the control sequence

$$u_k = u(t_k), \qquad k=0,1,2,\ldots,N-1. \tag{6}$$

Introducing so called block pulse functions $v_k(t)$ defined by

$$\begin{aligned} v_k(t) &= 1, \qquad t\in[t_k,t_{k+1}), \\ v_k(t) &= 0, \qquad \text{elsewhere}, \end{aligned} \tag{7}$$

the control at each time t, $t_0 \leq t \leq t_f$ is given by

$$u(t) = \sum_{k=0}^{N-1} v_k(t)\ u_k \tag{8}$$

or

$$u(t)=[v_0(t)I_m\ v_1(t)I_m\ v_2(t)I_m \ldots v_{N-1}(t)I_m] \begin{bmatrix} u_0 \\ u_1 \\ u_2 \\ \cdot \\ \cdot \\ u_{N-1} \end{bmatrix}, \tag{9}$$

where I_m are identity matrices of dimension m where m is the dimension of the control vector u(t). Equation (9) can be written as

$$u(t) = V(t)\ U, \tag{10}$$

where

$$U = [\ u_0^T\ u_1^T\ u_2^T \ldots\ldots u_{N-1}^T\ ]^T \tag{11}$$

is a vector of length mN and

$$V(t) = [\ v_0 I_m\ \ v_1 I_m\ \ v_2 I_m \ldots\ldots v_{N-1} I_m\ ] \tag{12}$$

is a matrix with dimensions m x mN. If we enter (10) into the system equation (1) the solution for x(t) may be written as

$$x(t) = \Phi(t,t_0)\ x(t_0) + \int_{t_0}^{t_f} \Phi(t,s)\ B(s)\ V(s)\ ds\ U, \qquad t_0 \le t \le t_f, \tag{13}$$

where Φ is the state transition matrix belonging to system (1). Equation (13) can be written as

$$x(t) = \Phi(t,t_0)\ x(t_0) + \Gamma_v(t,t_0)\ U, \tag{14}$$

where

$$\Gamma_v(t,t_0) = \int_{t_0}^{t} \Phi(t,s)\ B(s)\ V(s)\ ds \tag{15}$$

which is a n x mN dimensional matrix where n equals the dimension of system (1). Entering (14) into the regulator criterion (2) results in

$$J = J(U,x(t_0))$$

$$=[\Phi(t_f,t_0)x(t_0)+\Gamma_v(t_f,t_0)U]^T\ H\ [\Phi(t_f,t_0)x(t_0) + \Gamma_v(t_f,t_0)U]$$

$$+ \int_{t_0}^{t_f} \Big[[\Phi(t,t_0)x(t_0) + \Gamma_v(t,t_0)U]^T\ Q(t)\ [\Phi(t,t_0)x(t_0) + \Gamma_v(t,t_0)U]$$

$$+ U^T\ V^T(t)\ R(t)\ V(t)\ U\ \Big]\ dt$$

which can be written as

$$J(U,x(t_0)) = x^T(t_0)\ H'\ x(t_0) + 2\ U^T\ M\ x(t_0) + U^T\ R'\ U \tag{16}$$

where

$$H' = \Phi^T(t_f,t_0)\ H\ \Phi(t_f,t_0) + \int_{t_0}^{t_f} \Phi^T(t,t_0)\ Q(t)\ \Phi(t,t_0)\ dt \tag{17}$$

which is a n x n matrix,

$$M = \Gamma_v^T(t_f,t_0)\ H\ \Phi(t_f,t_0) + \int_{t_0}^{t_f} \Gamma_v^T(t,t_0)\ Q(t)\ \Phi(t,t_0)\ dt \tag{18}$$

which is a mN x n dimensional matrix,

$$R'=\Gamma_v^T(t_f,t_0)\ H\ \Gamma_v(t_f,t_0) + \int_{t_0}^{t_f} [\Gamma_v^T(t,t_0)Q(t)\Gamma_v(t,t_0)+V^T(t)R(t)V(t)]\ dt \tag{19}$$

which is a mN x mN matrix. Consider the criterion (16). If $R'>0$, after completing the square, the criterion (16) becomes

$$J = (U+R'^{-1}Mx(t_0))^T R'(U+R'^{-1}Mx(t_0))+x^T(t_0)(H'-M^T R'^{-1}M)x(t_0) \qquad (20)$$

The control which minimizes (16) is therefore

$$U = - R'^{-1} M\, x(t_0), \qquad (21a)$$

and the minimum cost are

$$J = x^T(t_0)(H'-M^T R'^{-1}M)x(t_0). \qquad (21b)$$

It can be easily seen that $R'>0$ given the conditions $Q(t)\geq 0$, $H\geq 0$, $R(t)>0$, $t_0\leq t\leq t_f$. Note however that also when $R(t)\geq 0$, the integral in (19) will be positive definite if over some open time interval within $[t_0,t_f)$, the term $\Gamma_v^T(t,t_0)Q(t)\Gamma_v(t,t_0)+V^T(t)R(t)V(t)$ is positive definite. Another possibility for (19) to be positive definite, when $R(t)\geq 0$, is when the quadratic term $\Gamma^T(t_f,t_0)H\Gamma(t_f,t_0)$ is positive definite.

Except for $t=t_0$ solution (21a) is not in feedback form. To calculate a solution in feedback form using this calculation scheme, at every sampling instant t_k, $k=0,1,2,..,N-1$ one has to solve a new static regulator problem of the following form.

Minimize

$$J_k(U_k,x(t_k))= \int_{t_k}^{t_f} [x^T(t)\ Q(t)\ x(t) + u^T(t)\ R(t)\ u(t)]\ dt + x^T(t_f)\ H\ x(t_f) \qquad (22)$$

subjected to equation (1), where

$$U_k = [u_k^T, u_{k+1}^T, .., u_{N-1}^T]^T, \qquad (23)$$

of which only u_k is used for the actual control. By inspection of (21a) the solution to the problem (1),(22) is given by

$$U_k = -R_k'^{-1} M_k \, x(t_k) \tag{24}$$

where M_k and R_k' are of dimension $m(N-k) \times n$ and $m(N-k) \times m(N-k)$ and given by (18),(19) with t_0 replaced by t_k.

Inserting equation (14) into the tracking criterion (5) results in

$$J(U,x(t_0),x_r(t)) = [\Phi(t_f,t_0)x(t_0)+\Gamma_v(t_f,t_0)U-x_r(t_f)]^T H$$
$$[\Phi(t_f,t_0)x(t_0)+\Gamma_v(t_f,t_0)U-x_r(t_f)] +$$
$$\int_{t_0}^{t_f} \Big[[\Phi(t,t_0)x(t_0)+\Gamma_v(t,t_0)U-x_r(t)]^T Q(t)$$
$$[\Phi(t,t_0)x(t_0)+\Gamma_v(t,t_0)U-x_r(t)]+U^T V^T(t)R(t)V(t)U\Big]dt, \quad t_0 \le t \le t_f. \tag{25}$$

Introducing H', M, and R' given by (17),(18),(19) this may be written as

$$J(U,x(t_0),x_r(t))=x^T(t_0)H'x(t_0)+J_1(x(t_0),x_r(t))+2U^T(Mx(t_0)-L)+U^T R'U \tag{26}$$

where L, which is a vector of length mN, is given by,

$$L = \Gamma_v^T(t_f,t_0) \; H \; x_r(t_f) + \int_{t_0}^{t_f} \Gamma_v^T(t,t_0) \; Q(t) \; x_r(t) \; dt, \tag{27a}$$

and finally,

$$J_1(x(t_0),x_r(t))=\int_{t_0}^{t_f} \Big[x_r^T(t)Q(t)x_r(t)-2x_r^T(t)Q(t)\Phi(t,t_0)x(t_0)\Big]dt$$
$$+x_r^T(t_f)Hx_r(t_f)-2x_r^T(t_f)H\Phi(t_f,t_0)x(t_0). \tag{27b}$$

Note that J_1 is independent of the control U. Consider the

criterion (26). If $R'>0$, after completing the square, the criterion (26) becomes

$$J = (U+R'^{-1}(Mx(t_0)-L))^T R'(U+R'^{-1}(Mx(t_0)-L))$$

$$+x^T(t_0)(H'-M^T R'^{-1}M)x(t_0)+2x^T(t_0)M^T R'^{-1}L-L^T R'^{-1}L+J_1. \tag{28}$$

Since only the first term of (28) depends on the control the control which minimizes (28) equals

$$U = -R'^{-1}\ (M\ x(t_0)\ -\ L), \tag{29a}$$

and the minimum cost are,

$$J = x^T(t_0)(H'-M^T R'^{-1}M)x(t_0)-2x^T(t_0)M^T R'^{-1}L-L^T R'^{-1}L+J_1. \tag{29b}$$

The remarks after solution (21) of the regulator problem also hold for the tracking problem. The solution at each time instant t_k of the corresponding static tracking problem is given by

$$U_k = -R_k'^{-1}\ (M_k\ x(t_k)+\ L_k) \tag{30}$$

where R_k', M_k are the same as in the regulator case and where L_k is given by (27a) with t_0 replaced by t_k. Note that we have derived explicit expressions for the minimum cost of both the regulator and tracking problem, which were not derived by Nour Eldin (1971). Note furthermore that the dimension of the matrices R_k', M_k and L_k, which determine the solution of the regulator and tracking problem at each time instant t_k, increases linearly with the horizon of the problem. Note furthermore that except from R_k', which equals the final $m(N-k)$ rows and columns of R', opposed to what is mentioned by Nour Eldin, these matrices have to be recomputed at each sampling instant (Van Willigenburg 1990). From a computational point of view this is very undesirable. The computation time necessary to compute the solutions (24),(30) increases drastically with growing dimensions of R_k', M_k and L_k,

while the accuracy of the computation decreases.

From Levis, Schlueter and Athans (1971), Halyo Caglayan (1976) and De Koning (1980), it is already known that the digital regulator problem can be transformed into an equivalent discrete-time regulator problem with unconstrained control. A crossterm, involving the state and the control, appears in the equivalent discrete-time criterion, which may however be eliminated by introducing a new control variable (see section 4). The resulting system and criterion constitutes a standard discrete-time regulator problem. To the best knowledge of the author no attempts have been made in the literature to transform the digital tracking problem into an equivalent discrete-time problem, with unconstrained control. In this paper we will present this transformation. The resulting equivalent discrete-time tracking problem differs from the standard discrete-time one (Lewis 1986). However the differences in both problems are minor and we will use exactly the same line of derivation to derive the digital tracker, as was used by Lewis to derive the discrete-time tracker. As can be expected differences in the solutions are also minor. In fact two extra terms show up in the solution of the digital tracker.

4. Solutions to the regulator and tracking problem via dynamic optimization

4.1 The equivalent discrete-time regulator and tracking problem

The derivation of the equivalent discrete-time regulator problem for continuous-time linear time-varying systems resembles the derivation in case of time-invariant systems, given by Levis, Schlueter and Athans (1971). The solution of system (1) is given by

$$x(t) = \Phi(t,t_k)\ x(t_k) + \Gamma(t,t_k)\ u(t_k)\ , \qquad t\in[t_k,t_{k+1}),$$

$$k=0,1,2,..,N-1, \quad (31)$$

where Φ is the state transition matrix of system (1),

$$\Gamma(t,t_k) = \int_{t_k}^{t} \Phi(t,s)\ B(s)\ ds \quad (32)$$

Inserting $t=t_{k+1}$ in (31) we have

$$x_{k+1} = \Phi_k\ x_k + \Gamma_k\ u_k \quad (33a)$$

where

$$x_k = x(t_k), \quad (33b)$$
$$u_k = u(t_k), \quad (33c)$$
$$\Phi_k = \Phi(t_{k+1},t_k), \quad (33d)$$
$$\Gamma_k = \Gamma(t_{k+1},t_k). \quad (33e)$$

The system (33) is called the equivalent discrete-time system since the behavior of this system is exactly the same as that of system (1) at the sampling instants, for $k=0,1,2,..,N-1$.

The regulator criterion (2) may be written as

$$J = \sum_{k=0}^{N-1} \left(\int_{t_k}^{t_{k+1}} [x^T(t)Q(t)x(t)+u^T(t)R(t)u(t)]\ dt \right) + x_N^T H x_N \quad (34)$$

which, given (31), equals

$$J = \sum_{k=0}^{N-1} \left(\int_{t_k}^{t_{k+1}} [x_k^T\Phi^T(t,t_k)Q(t)\Phi(t,t_k)x_k+2x_k^T\Phi^T(t,t_k)Q(t)\Gamma(t,t_k)u_k \right.$$
$$\left. +u_k^T(R_k+\Gamma^T(t,t_k)Q(t)\Gamma(t,t_k))u_k]\ dt \right) + x_N^T H x_N. \quad (35)$$

Introducing,

$$Q_k = \int_{t_k}^{t_{k+1}} \Phi^T(t,t_k)\ Q(t)\ \Phi(t,t_k)\ dt, \tag{36a}$$

$$M_k = \int_{t_k}^{t_{k+1}} \Phi^T(t,t_k)\ Q(t)\ \Gamma(t,t_k)\ dt, \tag{36b}$$

$$R_k = \int_{t_k}^{t_{k+1}} [R(t) + \Gamma^T(t,t_k)\ Q(t)\ \Gamma(t,t_k)]\ dt, \tag{36c}$$

brings us in a position, after having stated the equivalent discrete-time system (33), to state the equivalent discrete-time criterion

$$J = \sum_{k=0}^{N-1} \left(x_k^T\ Q_k\ x_k + 2\ x_k^T\ M_k\ u_k + u_k^T\ R_k\ u_k\right) + x_N^T\ H\ x_N \tag{37}$$

where Q_k, M_k and R_k are given by (36). From (36) it can be seen that $Q(t)\geq 0$, and $R(t)>0$ implies $Q_k\geq 0$, and $R_k>0$. However by inspection of (36c) it can be seen that if $R(t)\geq 0$, and $\Gamma^T(t,t_k)Q(t)\Gamma(t,t_k)+R(t)$ is positive definite over some open time interval within $[t_k,t_{k+1})$ then also $R_k>0$. In the sequel of the paper we will assume $R_k>0$. The original regulator problem is equivalent to the discrete-time regulator problem given by (33) and (37). Note that the equivalent discrete-time system reflects the system behavior at the sampling instants, whereas the discrete-time criterion reflects the continuous costs of the original problem. We are not faced with the problem of searching a proper discrete-time criterion that leads to a satisfactory continuous-time behavior. The criterion simply arises from the original problem. Note also that this discrete-time criterion has another structure then the usual one, since it contains a crossterm $2x_k^T M_k u_k$. In other words using the usual discrete time criterion will never result in an optimal continuous-time behavior!

The procedure to derive the equivalent discrete-time tracking problem proceeds along exactly the same lines. Substituting the solution (31) of system (1) into the tracking criterion (5) results in

$$J = \sum_{k=0}^{N-1} \Bigg(\int_{t_k}^{t_{k+1}} [x_k^T \Phi^T(t,t_k) Q(t) \Phi(t,t_k) x_k + 2x_k^T \Phi^T(t,t_k) Q(t) \Gamma(t,t_k) u_k +$$

$$+ u_k^T (R_k + \Gamma^T(t,t_k) Q(t) \Gamma(t,t_k)) u_k$$

$$- 2x_r^T(t) Q(t) \Phi(t,t_k) x_k - 2x_r^T(t) Q(t) \Gamma(t,t_k) u_k + x_r^T(t) Q(t) x_r(t)] \, dt \Bigg)$$

$$+ x_N H x_N - 2x_r^T(t_f) H x_N + x_r^T(t_f) H x_r(t_f). \tag{38}$$

Introducing again Q_k, M_k and R_k given by (36) and also

$$L_k = \int_{t_k}^{t_{k+1}} x_r^T(t) \; Q(t) \; \Phi(t,t_k) \; dt, \tag{39a}$$

$$T_k = \int_{t_k}^{t_{k+1}} x_r^T(t) \; Q(t) \; \Gamma(t,t_k) \; dt, \tag{39b}$$

$$X_k = \int_{t_k}^{t_{k+1}} x_r^T(t) \; Q(t) \; x_r(t) \; dt, \tag{39c}$$

the tracking criterion becomes

$$J = \sum_{k=0}^{N-1} \left(x_k^T Q_k x_k + 2x_k^T M_k u_k + u_k^T R_k u_k - 2L_k x_k - 2T_k u_k + X_k \right) + x_N^T H x_N$$

$$- 2x_r^T(t_f) H x_N + x_r^T(t_f) H x_r(t_f). \tag{40}$$

The equivalent discrete-time tracking problem is determined by the equivalent discrete-time system (33) and the equivalent

discrete-time criterion (40), where the equivalent discrete-time criterion matrices are given by (36), and (39).

4.2 Solutions of the equivalent discrete-time regulator and tracking problem

It has already been mentioned that the equivalent discrete-time regulator problem (33),(37) can be transformed into a standard discrete-time regulator problem where the criterion no longer contains a cross term $2x_k^T M_k u_k$ (Levis, Schlueter and Athans 1971, Halyo and Caglayan 1976, De Koning 1980). By introducing a new control variable u_k' which satisfies

$$u_k' = u_k + R_k^{-1} M_k^T x_k \tag{41}$$

the equivalent discrete-time system (33a) and the criterion (37) may be written as

$$x_{k+1} = \Phi_k' x_k + \Gamma_k u_k', \tag{42}$$

$$J = \sum_{k=0}^{N-1} \left(x_k^T Q_k' x_k + u_k'^T R_k u_k' \right) + x_N^T H x_N, \tag{43}$$

where

$$\Phi_k' = \Phi_k - \Gamma_k R_k^{-1} M_k^T, \tag{44a}$$

$$Q_k' = Q_k - M_k R_k^{-1} M_k^T. \tag{44b}$$

Applying the control (41) to system (42) results in exactly the same state evolution and costs as applying the original control to the original system (33a). Therefore the discrete-time regulator problem (42),(43) is equivalent to the original one. The solution of the problem (42),(43) is well known and given by Lewis (1986)

$$u_k' = -K_k' \, x_k, \qquad k=0,1,2,..,N-1, \tag{45a}$$

$$K_k' = (\Gamma_k^T S_{k+1} \Gamma_k + R_k)^{-1} \Gamma_k^T S_{k+1} \Phi_k', \tag{45b}$$

$$S_k = \Phi_k'^T S_{k+1} \Phi_k' - K_k'^T (R_k + \Gamma_k^T S_{k+1} \Gamma_k) K_k' + Q_k', \qquad S_N = H, \tag{45c}$$

and the corresponding costs are given by

$$J = x_0^T S_0 x_0. \tag{45e}$$

Equation (45c) is written in a different form for reasons that will become clear later. As a matter of fact several forms of (45c) are well known. The solution (45) holds for $R_k>0$ and $Q_k'\geq 0$. Levis, Schlueter and Athans (1971) proved for linear time-invariant systems that $Q\geq 0$, $R\geq 0$, implies $Q_k'\geq 0$. The proof however, did not make use of the time-invariant nature of the system and cost matrices, so it also holds in the time-varying case. For the sake of completeness we repeat it.

Consider the cost of the digital regulator over $[t_k, t_{k+1})$, i.e.

$$J_k = \int_{t_k}^{t_{k+1}} x^T(t)Q(t)x(t) + u^T(t)R(t)u(t)dt. \tag{46a}$$

If a piecewise constant control u_k is applied this becomes

$$J_k = x_k^T Q_k x_k + 2x_k^T M_k u_k + u_k^T R_k u_k. \tag{46b}$$

If

$$u_k = -R_k^{-1} M_k^T x_k \tag{46c}$$

then

$$J_k = x_k^T \left[Q_k - 2M_k R_k^{-1} M_k^T + M_k R_k M_k^T \right] x_k = x_k^T \left[Q_k - M_k R_k^{-1} M_k^T \right] x_k. \tag{46d}$$

Given (46a) and $Q(t)\geq 0$, $R(t)\geq 0$ it follows that $J_k\geq 0$. Then from (46d), which holds for all x_k, it follows that

$$Q'_k = Q_k - M_k R_k^{-1} M_k^T \geq 0.$$

Considering the transformation of the control (41) and given the solution (45) the optimal control for the original system (33a) is given by

$$u_k = -(K'_k + R_k^{-1} M_k^T)\ x_k. \tag{47}$$

Defining the feedback K_k for the original system (33a) by

$$u_k = -K_k\ x_k \tag{48}$$

then clearly

$$K_k = K'_k + R_k^{-1} M_k^T. \tag{49}$$

Entering equation (44a), into (45b), and inserting the result into (49) gives

$$\begin{aligned} K_k &= (\Gamma_k^T S_{k+1} \Gamma_k + R_k)^{-1} \Gamma_k^T S_{k+1} (\Phi_k - \Gamma_k R_k^{-1} M_k^T) + R_k^{-1} M_k^T \\ &= (\Gamma_k^T S_{k+1} \Gamma_k + R_k)^{-1} (\Gamma_k^T S_{k+1} \Phi_k - \Gamma_k^T S_{k+1} \Gamma_k R_k^{-1} M_k^T) + R_k^{-1} M_k^T \\ &= (\Gamma_k^T S_{k+1} \Gamma_k + R_k)^{-1} [\Gamma_k^T S_{k+1} \Phi_k - \Gamma_k^T S_{k+1} \Gamma_k R_k^{-1} M_k^T + (\Gamma_k^T S_{k+1} \Gamma_k + R_k) R_k^{-1} M_k^T] \\ &= (\Gamma_k^T S_{k+1} \Gamma_k + R_k)^{-1} (\Gamma_k^T S_{k+1} \Phi_k + M_k^T). \end{aligned} \tag{50}$$

We just mentioned that equation (45c) can be written in several forms (Lewis 1986). One of them is called the Joseph stabilized form

$$S_k = (\Phi'_k - \Gamma_k K'_k)^T\ S_{k+1}\ (\Phi'_k - \Gamma_k K'_k) + K_k'^T R_k\ K'_k + Q'_k, \tag{51}$$

which is known for its good numerical performance. If we insert (44) and (49) into (51) the term involving S_{k+1} does not change since the closed loop behavior of the original system (33a) equals

the behavior of system (42). So we have using (50)

$$S_k=(\Phi_k-\Gamma_k K_k)^T S_{k+1}(\Phi_k-\Gamma_k K_k)+(K_k-R_k^{-1}M_k^T)^T R_k(K_k-R_k^{-1}M_k^T)+Q_k-M_k R_k^{-1}M_k^T$$

$$=\Phi_k^T S_{k+1}\Phi_k-\Phi_k^T S_{k+1}\Gamma_k K_k-K_k^T\Gamma_k^T S_{k+1}\Phi_k+K_k^T\Gamma_k^T S_{k+1}\Gamma_k K_k+K_k^T R_k K_k-K_k^T M_k^T-M_k K_k$$

$$+M_k R_k^{-1}M_k^T+Q_k-M_k R_k^{-1}M_k^T$$

$$=\Phi_k^T S_{k+1}\Phi_k+K_k^T(R_k+\Gamma_k^T S_{k+1}\Gamma_k)K_k-K_k^T(\Gamma_k^T S_{k+1}\Phi_k+M_k^T)-(\Phi_k^T S_{k+1}\Gamma_k+M_k)^T K_k+Q_k$$

$$=\Phi_k^T S_{k+1}\Phi_k-(\Phi_k^T S_{k+1}\Gamma_k+M_k)K_k+Q_k. \tag{52}$$

Since S_k, Q_k, $k=0,1,2,..,N$ are symmetric the second term in (52) is symmetric so (52) may be written as

$$S_k=\Phi_k^T S_{k+1}\Phi_k-K_k^T(\Gamma_k^T S_{k+1}\Phi_k+M_k^T)+Q_k$$

$$=\Phi_k^T S_{k+1}\Phi_k-K_k^T(R_k+\Gamma_k^T S_{k+1}\Gamma_k)K_k+Q_k \tag{53}$$

which is of exactly the same form as (45c).

Summarizing, the solution to the equivalent discrete-time regulator problem (33),(37) is given by (50),(53) i.e.

$$u_k=-K_k\ x_k, \qquad k=0,1,2,..,N-1, \tag{54a}$$

$$K_k=(\Gamma_k^T S_{k+1}\Gamma_k+R_k)^{-1}(\Gamma_k^T S_{k+1}\Phi_k+M_k^T), \tag{54b}$$

$$S_k=\Phi_k^T S_{k+1}\Phi_k-K_k^T(\Gamma_k^T S_{k+1}\Gamma_k+R_k)K_k+Q_k, \qquad S_N=H, \tag{54c}$$

$$J=x_0^T S_0 x_0, \tag{54d}$$

where the equivalent discrete-time system matrices are given by (33) and the equivalent discrete-time criterion matrices by (36).

In deriving the solution of the equivalent discrete-time tracking problem we again use the transformation (41). After application we

can write for the equivalent discrete-time tracking criterion (40)

$$J = \sum_{k=0}^{N-1} \left(x_k^T Q_k' x_k + u_k'^T R_k u_k' - 2L_k' x_k - 2T_k u_k' + X_k \right) + x_N^T H x_N - 2x_r^T(t_f) H x_N + x_r^T(t_f) H x_r(t_f) \tag{55}$$

where

$$L_k' = L_k - T_k R_k^{-1} M_k^T \tag{56}$$

and Q_k' is given by (44b).

We will now make use of exactly the same line of derivation used by Lewis to derive the discrete-time tracker, to derive a solution for the equivalent discrete-time tracking problem (42),(55). We will use general results of the so called discrete non linear optimal controller (Lewis 1986). Furthermore it will turn out convenient to treat the problem where 1/2J is minimized in stead of J in (56), which of course will not affect the solution. The costate equation of the resulting discrete-time tracking problem equals

$$\lambda_k = \Phi_k'^T \lambda_{k+1} + Q_k' x_k - L_k'^T. \tag{57}$$

The stationarity condition is given by

$$0 = \Gamma_k^T \lambda_{k+1} + R_k u_k' - T_k^T, \tag{58}$$

so the optimal control equals

$$u_k' = -R_k^{-1} (\Gamma_k^T \lambda_{k+1} - T_k^T). \tag{59}$$

The boundary conditions are given by x_0 and

$$\lambda_N = H x_N - H x_r(t_f). \tag{60}$$

As assumed by Lewis (1986) in deriving the discrete-time tracker, we now assume that the costate at each time instant k is of the following form

$$\lambda_k = S_k\, x_k - v_k, \tag{61}$$

which is true, considering the boundary condition (61), for k=N if

$$S_N = H \tag{62}$$

and

$$v_N = H\, x_r(t_f). \tag{63}$$

Using the system equation (42), the expression for the optimal control (59), and the assumption (61) we may write

$$x_{k+1}=\Phi_k' x_k-\Gamma_k R_k^{-1}\Gamma_{k+1}^T S_{k+1} x_{k+1}+\Gamma_k R_k^{-1}\Gamma_k^T v_{k+1}+\Gamma_k R_k^{-1} T_k^T \tag{64}$$

so

$$x_{k+1}=(I+\Gamma_k R_k^{-1}\Gamma_k^T S_{k+1})^{-1}(\Phi_k' x_k+\Gamma_k R_k^{-1}\Gamma_k^T v_{k+1}+\Gamma_k R_k^{-1} T_k^T). \tag{65}$$

Using the costate equation (57), the assumption (61) and the result just obtained (65) we may write

$$\lambda_k=S_k x_k-v_k=\Phi_k'^T S_{k+1}(I+\Gamma_k R_k^{-1}\Gamma_k^T S_{k+1})^{-1}(\Phi_k' x_k+\Gamma_k R_k^{-1}\Gamma_k^T v_{k+1}+\Gamma_k R_k^{-1} T_k^T)+Q_k' x_k$$
$$-\Phi_k'^T v_{k+1}-L_k^T. \tag{66}$$

Skipping λ_k in equation (66) and collecting all terms in x_k results in

$$[-S_k+\Phi_k'^T S_{k+1}(I+\Gamma_k R_k^{-1}\Gamma_k^T S_{k+1})^{-1}\Phi_k'+Q_k']\, x_k$$
$$+[\, v_k+\Phi_k'^T S_{k+1}(I+\Gamma_k R_k^{-1}\Gamma_k^T S_{k+1})^{-1}\Gamma_k R_k^{-1}\Gamma_k^T v_{k+1}$$
$$+\Phi_k'^T S_{k+1}(I+\Gamma_k R_k^{-1}\Gamma_k^T S_{k+1})^{-1}\Gamma_k R_k^{-1} T_k^T-\Phi_k'^T v_{k+1}-L_k^T]=0. \tag{67}$$

Again following Lewis equation (67), which represents the costate equation, must hold for all x_k given any x_0, so the bracketed terms must individually vanish. If we consider the bracketed term preceding x_k, after application of the matrix inversion lemma we may write

$$S_k=\Phi_k'^T \; [\; S_{k+1}-S_{k+1}\Gamma_k(\Gamma_k^T S_{k+1}\Gamma_k+R_k)^{-1}\Gamma_k^T S_{k+1} \;]\; \Phi_k' + Q_k'. \tag{68}$$

Considering the second bracketed term in (67) and again applying the matrix inversion lemma one may write

$$v_k= [\; \Phi_k'^T-\Phi_k'^T S_{k+1}\Gamma_k(\Gamma_k^T S_{k+1}\Gamma_k+R_k)^{-1}\Gamma_k^T \;]\; v_{k+1}$$
$$- \Phi_k'^T S_{k+1}\Gamma_k(\Gamma_k^T S_{k+1}\Gamma_k+R_k)^{-1}T_k^T + L_k'^T. \tag{69}$$

As can be seen from the recursions (68), (69) which run backward in time, and can be calculated off-line, the assumption (61) was a valid one. Equation (68) equals (45c) again written in a different form. The control determined by (59), given the valid assumption (61) can be written as

$$u_k = -R_k^{-1}\Gamma_k^T(S_{k+1}x_{k+1}-v_{k+1})+R_k^{-1}T_k^T. \tag{70}$$

Equation (70) presents the control at time k as a function of the state at time k+1. This undesirable result can be overcome by insertion of the system equation (42)

$$u_k' = -R_k^{-1}\Gamma_k^T S_{k+1}(\Phi_k' x_k+\Gamma_k u_k)+R_k^{-1}\Gamma_k v_{k+1}+R_k^{-1}T_k^T. \tag{71}$$

Multiplying both sides with R_k and solving for u_k results in

$$u_k' = (R_k+\Gamma_k^T S_{k+1}\Gamma_k)^{-1}(-\Gamma_k^T S_{k+1}\Phi_k' x_k+\Gamma_k^T v_{k+1}+T_k^T). \tag{72}$$

The solution to the discrete-time tracking problem (42), (55) is given by (68),(69) and (72) and can be written in the following form

$$K_k'=(R_k + \Gamma_k^T S_{k+1} \Gamma_k)^{-1} \Gamma_k^T S_{k+1}\Phi_k', \tag{73a}$$

$$K_k^1=(R_k + \Gamma_k^T S_{k+1} \Gamma_k)^{-1} \Gamma_k^T, \tag{73b}$$

$$K_k^2=(R_k + \Gamma_k^T S_{k+1} \Gamma_k)^{-1}, \tag{73c}$$

$$u_k'=-K_k' x_k + K_k^1 v_{k+1} + K_k^2 T_k^T, \tag{73e}$$

$$S_k=\Phi_k'^T S_{k+1}\Phi_k' - K_k'^T(R_k+\Gamma_k^T S_{k+1}\Gamma_k) K_k' +Q_k', \qquad S_N=H, \tag{73f}$$

$$v_k=(\Phi_k' - \Gamma_k K_k')^T v_{k+1} - K_k'^T T_k^T + L_k'^T, \qquad v_N=Hx_r(t_f). \tag{73g}$$

The criterion matrices are given by (36), (39), (44b), and (56) and the system matrices by (42) and (44a). If we compare this solution to the solution (45) of the regulator problem it is apparent that the feedback for both problems is the same since (73a), (73f) equal (45b), (45c). Remember that both solutions hold for the system (42), so after application of the transformation (41). The solution for the original system (33a) in case of the regulator problem was given by (54). In deriving the solution of the tracking problem for the original system (33a) since the feedback of the equivalent problems (73), (45) is the same we may copy the feedback equations (54b) and (54c).

$$K_k=(\Gamma_k^T S_{k+1}\Gamma_k+R_k)^{-1}(\Gamma_k^T S_{k+1}\Phi_k+M_k^T), \tag{74a}$$

$$S_k=\Phi_k^T S_{k+1}\Phi_k-K_k^T(\Gamma_k^T S_{k+1}\Gamma_k+R_k)K_k+Q_k. \tag{74b}$$

Furthermore the feedback gains K_k^1 and K_k^2 are not affected by the transformation (41), so (73e) becomes

$$u_k=-K_k x_k+K_k^1 v_{k+1}+K_k^2 T_k^T. \tag{74c}$$

Using (44a), (44b) and (48) in (73g) and remembering again that the closed loop system behavior of (33) and (42) is the same we are left with

$$v_k=(\Phi_k-\Gamma_k K_k)v_{k+1}-(K_k-R_k^{-1}M_k^T)^T T_k^T+(L_k-T_k R_k^{-1}M_k^T)^T$$
$$=(\Phi_k-\Gamma_k K_k)^T v_{k+1}-K_k^T T_k^T+L_k^T, \tag{74d}$$

which is of exactly the same form as (73g). Summarizing the solution to the equivalent discrete-time tracking problem (33), (40) is given by (73b), (73c), (73h), (73i), and (74). Note that we did not derive an expression for the cost J. This however can be done. The result is presented in the companion paper (Van Willigenburg and De Koning 1990) which treats the case of linear systems disturbed by additive white noise and incomplete state information at the sampling instants. There the expression for the cost J arises naturally. Note furthermore that from a computational point of view the solutions presented in this section are very attractive, since the dimension of the matrices that make up the recursions are small, and independent of the horizon of the problem.

5. Conclusions

We presented solutions to the digital optimal regulator and tracking problem for deterministic time-varying systems with complete state information at the sampling instants, based on both static and dynamic optimization. The solutions, based on dynamic optimization, are very well suited for numerical computation since they consist of Riccati type recursions which run backward in time. The computation of these recursions however is not straightforward since they demand the computation of integrals involving the state transition matrix of time-varying systems. These problems have been solved in another paper (Van Willigenburg 1990) which presents *numerical procedures* to compute the solutions. We demonstrated that solutions based on static optimization are impractical from a computational point of view, especially when the horizon of the problem becomes large.

The digital regulator result for time-varying systems is especially important if a digital perturbation controller, based

on linearized dynamics, has to be designed for a continuous-time non linear system that tracks a reference trajectory e.g. a robot manipulator executing a prescribed movement. The linearized dynamics in this case constitute a *time-varying* system. The result of the digital tracker is new and can be used in all situations where a linear system, controlled by a computer, has to track a reference trajectory e.g. a cartesian type robot that executes a prescribed movement.

Our approach treats the "real" digital control problems. Generally digital control problems are approximated by discrete-time control problems which completely disregard the inter-sample behavior. Obviously in our case we are not confronted with the problem of choosing a discrete-time criterion which results in a satisfactory continuous-time behavior. Furthermore our approach does not demand a "small" sampling time to prevent undesirable inter-sample behavior. For instance in the case of robot control this is very important, since a number of applications demand a great number of on-line computations, and sampling times are of the order of 10mS.

A natural extension of this paper is to investigate the digital optimal regulator and tracking problem in case of stochastic systems and incomplete state information. The solutions to these problems have been presented in a companion paper (Van Willigenburg and De Koning, 1990). The problems turn out to be certainty equivalent so we may use the results presented in this paper where the state is replaced by its estimate.

References

DE KONING W.L., 1980, 'Equivalent discrete optimal control problem for randomly sampled digital control systems', Int.J.Sys.Sci., 11, 841-855.

HALYO N., CAGLAYAN A.K., 1976, 'A separation theorem for the stochastic sampled-data LQG problem', Int. J. Contr., 23, 237-244

LEVIS A.H., SCHLUETER R.A., ATHANS M., 1971, 'On the behavior of optimal linear sampled data regulators', Int. J. Contr., 13,

343-361.

LEWIS F.L., 1986, Optimal Control, Wiley.

NOUR ELDIN H.A., 1971, 'Optimierung linearer regelsysteme mit quadratischer zielfunction', Lect. Notes Oper. Res. Math. Sys., 47.

VAN LOAN C.F., 1978, 'Computing Integrals Involving the Matrix Exponential', IEEE Trans. Aut. Contr., AC-23, 3, 395-404.

VAN WILLIGENBURG L.G., 1989, 'True digital tracking for an orthogonal robot manipulator', Proc. ICCON '89, TP 3-5.

VAN WILLIGENBURG L.G., DE KONING W.L., 1990, 'The digital optimal regulator and tracker for stochastic time-varying systems', submitted for publication.

VAN WILLIGENBURG L.G., 1990, 'Numerical procedures to compute the digital optimal regulator and tracker for time-varying systems', submitted for publication.

L.G. VAN WILLIGENBURG, W.L. DE KONING

THE DIGITAL OPTIMAL REGULATOR AND TRACKER FOR STOCHASTIC TIME-VARYING SYSTEMS

Abstract

The general approach to solve digital control problems is to *approximate* them by discrete-time control problems. In this paper we consider digital control problems without making any approximations, i.e. we solve problems involving *continuous-time* quadratic criteria. We solve the digital optimal regulator and tracking problem where the continuous-time system is linear time-varying, and disturbed by additive white noise, and the state information at the sampling instants incomplete, and corrupted by additive white noise. The control is piecewise constant. Both the regulator and tracking problem turn out to be certainty equivalent. The solutions to both the regulator and tracking problem therefore consist of the well known discrete-time Kalman one step ahead predictor, and a feedback generated by a Riccati type recursion that runs backwards in time. In case of the tracking problem the feedforward is also generated by a recursion that runs backwards in time. Both recursions can be computed off-line. Expressions for the minimum cost of both problems, explicit in the system, criterion and covariance matrices, are derived. In a companion paper we treat the numerical computation which is *not* straightforward.

Keywords digital optimal control, regulator, tracker, linear time-varying systems

1. Introduction

In many practical situations we are faced with a continuous-time plant, controlled by a digital computer. It is common practice to *approximate* the associated digital control problems by discrete-time control problems which only consider the system

behavior at the sampling instants (Ackermann, 1985). In these cases *the inter-sample behavior is completely disregarded.* Two main disadvantages of this approach should be mentioned. The sampling time has to be chosen small enough to prevent undesirable inter-sample behavior. For instance in the case of robot control, where the computational burden on the computer is high, this presents a serious limitation. Furthermore a discrete-time criterion has to be searched for, which leads to a satisfactory continuous-time behavior. Both the choice of this criterion and the choice of the sampling time are often reported to be a problem (Franklin and Powell, 1980, Astrom and Wittenmark, 1984). In this paper the digital control problems are solved without making any approximations since we consider *continuous-time criteria.* The digital optimal regulator for time-varying systems has already been considered by Halyo and Caglayan (1976). They however did not derive an expression for the minimum cost of the problem neither did they specify a numerical solution. The numerical solution is not straightforward since it involves the computation of integrals involving the state-transition matrix of time-varying systems. De Koning (1980a,b) considered the digital optimal regulator for time-invariant systems and derived an expression for the minimum cost of the problem, explicit in the system, criterion and covariance matrices.

We will present the digital optimal regulator and tracker for time-varying systems including expressions for the minimum cost explicit in the system, criterion and covariance matrices. In a companion paper (Van Willigenburg 1990) we treat the numerical computation. It is believed that the regulator result permits for the first time the design and *computation* of a digital optimal perturbation controller for non linear systems that have to track reference trajectories. Important applications are e.g. a robot performing a prescribed motion or a batch fermentation process, where in both cases the linearized dynamics about the trajectory constitute a *time-varying* system. The digital optimal tracker has never been considered in the literature. This is remarkable because it can be applied in all situations were a linear system,

controlled by a digital computer, has to track a reference trajectory, e.g. a cartesian type robot performing a prescribed motion.

2. Problem formulations

Consider the stochastic continuous-time linear time-varying system

$$\dot{x}(t) = A(t)\, x(t) + B(t)\, u(t) + v(t), \tag{1a}$$

where $A(t)$ and $B(t)$ are the system matrices and $\{v(t)\}$ a white noise process with possibly time-varying intensity, with

$$E\{v(t)\} = 0,\ \mathrm{cov}(v(t),v(s)) = V(t)\ \delta(t-s) \tag{1b}$$

and

$$E\{x(0)\} = \bar{x}(0),\ \mathrm{cov}(x(0),x(0)) = G,\ G\geq 0. \tag{1c}$$

The system is controlled by a digital computer, so measurements are taken at the sampling instants i.e.

$$y(t_k) = C(t_k)\ x(t_k) + w(t_k), \qquad k=0,1,2,3,.... \tag{1d}$$

where t_k, $k=0,1,2,..$ are the, not necessarily equidistant, sampling instants and $\{w(t_k)\}$ a discrete-time white noise process independent of $\{v(t)\}$, with

$$E\{w(t_k)\} = 0,\ \mathrm{cov}(w(t_k),w(t_l)) = W(t_k)\ \delta(t_k-t_l). \tag{1e}$$

The control is piecewise constant i.e.

$$u(t) = u(t_k) \qquad t\in[t_k,t_{k+1}) \qquad k=0,1,2,3.... \tag{1f}$$

The information available to compute the control u_k consists of the measurements and the controls up to t_{k-1}, i.e., $\{y(t_i),\ i=0,1,2,..,k-1\}$ and $\{u(t_i),\ i=0,1,2,..,k-1\}$. In that case the time

available for the computer to compute $u(t_k)$ equals t_k-t_{k-1}. We may also assume the information to be $\{y(t_i),\ i=0,1,2,..,k\}$ and $\{u(t_i),\ i=0,1,2,..,k-1\}$ in case the computation time is negligible compared to t_k-t_{k-1}. All the results of this paper are still valid in that case.

The *digital optimal regulator problem* for the system (1) is to minimize

$$J = E\left(\int_{t_0}^{t_f} x^T(t)\ Q(t)\ x(t) + u^T(t)\ R(t)\ u(t)\ dt + x^T(t_f)\ H\ x(t_f) \right) \tag{2}$$

where E denotes the expectation operator, and $Q(t)\geq 0$, $H\geq 0$ and $R(t)>0$. We will pay special attention to situations where $R(t)\geq 0$. Furthermore

$$t_f = t_N \tag{3}$$

where N is a positive integer.

The *digital optimal tracking problem* takes the following form. Given the system (1) and a reference trajectory

$$x_r(t), \qquad t_0 \leq t \leq t_f, \tag{4}$$

minimize

$$J = E\left(\int_{t_0}^{t_f} (x(t)-x_r(t))^T\ Q(t)\ (x(t)-x_r(t)) + u^T(t)\ R(t)\ u(t)\ dt + (x(t_f) - x_r(t_f))^T\ H\ (x(t_f) - x_r(t_f)) \right), \tag{5}$$

where furthermore (3) holds, and again $Q(t)\geq 0$, $H\geq 0$ and $R(t)>0$. As in the regulator case we will pay special attention to situations where $R(t)\geq 0$.

3. The equivalent discrete-time regulator and tracking problem.

To solve the digital optimal regulator and tracking problem presented in the previous chapter, we first transform them into so called equivalent discrete-time problems (Levis, Schlueter and Athans, 1971, Halyo and Caglayan, 1976, De Koning, 1980, Van Willigenburg and De Koning, 1990), with unconstrained control. The derivation of the equivalent discrete-time regulator problem for stochastic continuous-time linear time-varying systems resembles the derivation in case of time-invariant systems, given by de Koning (1980). Equation (1) is defined in terms of the stochastic integral equation

$$x(t) = x(t_0) + \int_{t_0}^{t} A(s)x(s)ds + \int_{t_0}^{t} B(s)u(s)ds + \int_{t_0}^{t} d\beta(s), \tag{6a}$$

where $\beta(t)$ is a zero-mean process with independent increments and

$$E\{\beta(t)\}=0, \quad \mathrm{cov}(d\beta(t),d\beta(t)) = V(t)dt. \tag{6b}$$

The solution of system (1) is given by

$$x(t) = \Phi(t,t_k)\ x(t_k) + \Gamma(t,t_k)\ u(t_k) + v(t,t_k), \quad t\in[t_k,t_k+1), \quad k=0,1,2,..,N-1, \tag{7}$$

where

Φ is the state transition matrix of system (1),

$$\Gamma(t,t_k) = \int_{t_k}^{t} \Phi(t,s)\ B(s)\ ds \tag{8}$$

and

$$v(t,t_k) = \int_{t_k}^{t} \Phi(t,s)\ d\beta(s). \tag{9}$$

From (9) it follows that

$$E\{v(t,t_k)\} = 0 \tag{10a}$$

and

$$E\{v(t,t_k)\ v^T(t,t_k)\} = \iint_{t_k}^{t} \Phi(t,\lambda)\ E\{d\beta(\lambda)\ d\beta^T(\mu)\}\ \Phi^T(t,\mu)$$

$$= \int_{t_k}^{t} \Phi(t,\lambda)\ V(t)\ \Phi^T(t,\lambda)\ d\lambda = V(t,t_k). \tag{10b}$$

For $t=t_{k+1}$ we have

$$x_{k+1} = \Phi_k\ x_k + \Gamma_k\ u_k + v_k \tag{11a}$$

and furthermore

$$y_k = C_k\ x_k + w_k, \tag{11b}$$

where

$$x_k = x(t_k), \tag{11c}$$
$$y_k = y(t_k), \tag{11d}$$
$$u_k = u(t_k), \tag{11e}$$
$$\Phi_k = \Phi(t_{k+1},t_k), \tag{11f}$$
$$\Gamma_k = \Gamma(t_{k+1},t_k), \tag{11g}$$
$$C_k = C(t_k), \tag{11h}$$
$$v_k = v(t_{k+1},t_k),\ V_k = V(t_{k+1},t_k), \tag{11i}$$
$$w_k = w(t_k),\ W_k = W(t_k). \tag{11j}$$

The system (11) is called the equivalent discrete-time system since the behavior of this system is exactly the same as that of system (1) at the sampling instants, for k=0,1,2,..,N-1.

The stochastic regulator criterion (2) may be written as

$$J=E\left(\sum_{k=0}^{N-1}\int_{t_k}^{t_{k+1}} x^T(t)Q(t)x(t)+u^T(t)R(t)u(t)dt+x_N^T H x_N\right) \tag{12}$$

which, given (7), equals

$$\begin{aligned} J= E\Bigg(\sum_{k=0}^{N-1}\int_{t_k}^{t_{k+1}} & x_k^T\Phi^T(t,t_k)Q(t)\Phi(t,t_k)x_k+2x_k^T\Phi^T(t,t_k)Q(t)\Gamma(t,t_k)u_k \\ & +u_k^T(R_k+\Gamma^T(t,t_k)Q(t)\Gamma(t,t_k))u_k+v^T(t,t_k)Q(t)v(t,t_k) \\ & +2x_k^T\Phi^T(t,t_k)Q(t)v(t,t_k)+2u_k^T\Gamma^T(t,t_k)Q(t)v^T(t,t_k)\ dt\Bigg). \end{aligned} \tag{13}$$

Introducing,

$$Q_k = \int_{t_k}^{t_{k+1}}\Phi^T(t,t_k)\ Q(t)\ \Phi(t,t_k)\ dt, \tag{14a}$$

$$M_k = \int_{t_k}^{t_{k+1}}\Phi^T(t,t_k)\ Q(t)\ \Gamma(t,t_k)\ dt, \tag{14b}$$

$$R_k = \int_{t_k}^{t_{k+1}}[R(t) + \Gamma^T(t,t_k)\ Q(t)\ \Gamma(t,t_k)]\ dt, \tag{14c}$$

and splitting up the integral results in

$$J = E\left(\sum_{k=0}^{N-1} x_k^T\ Q_k\ x_k + 2\ x_k^T\ M_k\ u_k + u_k^T\ R_k\ u_k\right.$$

$$+ \int_{t_k}^{t_{k+1}} 2\ x_k^T\ \Phi^T(t,t_k)\ Q(t)\ v(t,t_k)\ dt$$

$$+ \int_{t_k}^{t_{k+1}} 2\ u_k^T\ \Gamma^T(t,t_k)\ v(t,t_k)\ dt$$

$$\left. + \int_{t_k}^{t_{k+1}} v^T(t,t_k)\ Q(t)\ v(t,t_k)\ dt \right\}. \tag{15}$$

The state x_k depends only on the increments $d\beta(t)$, $t\in[t_0,t_k]$ on x_0 and on $w_0,w_1,\ldots,w_{k-1}$, while $v(t,t_k)$, $t\geq t_k$ depends only on the increments $d\beta(t)$, $t\in[t_k,t-t_k]$, so x_k and $v(t,t_k)$, $t\geq t_k$ are independent. Because u_k depends only on $y_0,y_1,y_2,\ldots,y_{k-1}$, thus on $x_0,v_0,v_1,\ldots,v_{k-1},w_0,w_1,\ldots,w_{k-1}$ and since $\{v_k\}$ is independent of $\{w_k\}$, u_k is also independent of $v(t,t_k)$, $t\geq t_k$. Therefore

$$E\left\{ \int_{t_k}^{t_{k+1}} 2\ x_k^T\ \Phi_k^T(t,t_k)\ Q(t)\ v(t,t_k)\ dt \right\}$$

$$= \left. \int_{t_k}^{t_{k+1}} 2\ E\{x_k^T\}\ \Phi_k^T(t,t_k)\ Q(t)\ E\{v(t,t_k)\}\ dt \right\} = 0 \tag{16}$$

and

$$E\left\{ \int_{t_k}^{t_{k+1}} 2\ u_k^T\ \Gamma_k^T(t,t_k)\ Q(t)\ v(t,t_k)\ dt \right\}$$

$$= \left. \int_{t_k}^{t_{k+1}} 2\ E\{u_k^T\}\ \Gamma_k^T(t,t_k)\ Q(t)\ E\{v(t,t_k)\}\ dt \right\} = 0. \tag{17}$$

Furthermore,

$$E\left\{ \int_{t_k}^{t_{k+1}} v(t,t_k)\ Q(t)\ v^T(t,t_k)\ dt \right\}$$

$$= \int_{t_k}^{t_{k+1}} \operatorname{tr}[E(v(t,t_k)v^T(t,t_k))\ Q(t)]\ dt$$

$$= \int_{t_k}^{t_{k+1}} \operatorname{tr}[V(t,t_k)\ Q(t)]\ dt$$

$$= \gamma(t_{k+1},t_k) = \gamma_k. \tag{18}$$

Now we are in a position, after having stated the equivalent discrete-time system (11), to state the equivalent discrete-time criterion for the regulator problem.

$$J = E\left(\sum_{k=0}^{N-1}\left(x_k^TQ_kx_k + 2x_k^TM_ku_k + u_k^TR_ku_k\right) + x_N^THx_N \right) + \sum_{k=0}^{N-1} \gamma_k \tag{19}$$

where Q_k, M_k and R_k are given by (14). If $Q(t)\geq 0$, and $R(t)>0$, as assumed in chapter 2, by inspection of (14) it can be seen that $Q_k\geq 0$, and $R_k>0$. However by inspection of (14c) it can be seen that if $R(t)\geq 0$ and $\Gamma^T(t,t_k)Q(t)\Gamma(t,t_k)+R(t)$ is positive definite over some open time interval within $[t_k,t_{k+1})$ then also $R_k>0$. In the sequel of the paper we will assume $R_k>0$. Finally we have

$$\gamma_k = \int_{t_k}^{t_{k+1}} \operatorname{tr}[V(t,t_k)\ Q(t)]\ dt. \tag{20}$$

So the original digital optimal regulator problem is equivalent to the discrete-time regulator problem given by (11) and (19), where the equivalent discrete-time criterion matrices are given by (14) and (20). Note that the part involving γ_k in (19) is deterministic and independent of the control, so the problem of minimizing J, with respect to the control, is equivalent to minimizing

$$J' = E\left(\sum_{k=0}^{N-1}\left(x_k^TQ_kx_k + 2x_k^TM_ku_k + u_k^TR_ku_k\right) + x_N^THx_N \right). \tag{21}$$

In deriving the solution of the digital optimal regulator problem we will consider the minimization of (21).

The procedure to derive the equivalent discrete-time tracking problem proceeds along exactly the same lines. Substituting the solution (7) of system (1) into the tracking criterion (5) results in

$$J = E\Bigg(\sum_{k=0}^{N-1} \int_{t_k}^{t_{k+1}} x_k^T\Phi^T(t,t_k)Q(t)\Phi(t,t_k)x_k+2x_k^T\Phi^T(t,t_k)Q(t)\Gamma(t,t_k)u_k+$$
$$+u_k^T(R_k+\Gamma^T(t,t_k)Q(t)\Gamma(t,t_k))u_k+v^T(t,t_k)Q(t)v(t,t_k)$$
$$+2x_k^T\Phi^T(t,t_k)Q(t)v(t,t_k)+2u_k^T\Gamma^T(t,t_k)Q(t)v^T(t,t_k)$$
$$-2x_r^T(t)Q(t)\Phi(t,t_k)x_k-2x_r^T(t)Q(t)\Gamma(t,t_k)u_k-2x_r^T(t)Q(t)v(t,t_k)$$
$$+x_r^T(t)Q(t)x_r(t)\ dt\Bigg) + x_N^THx_N - 2x_r^T(t_f)Hx_N + x_r^T(t_f)Hx_r(t_f). \quad (22)$$

Comparing the tracking criterion (22) to the regulator criterion (13) we see that, except for terms involving the reference trajectory x_r, they are exactly the same. Since the reference trajectory $x_r(t)$, $0 \le t \le t_f$ is deterministic,

$$E\left(\int_{t_k}^{t_{k+1}} 2\ x_r^T(t)\ Q(t)\ v(t,t_k)\ dt \right)$$
$$= \int_{t_k}^{t_{k+1}} 2\ x_r^T(t)\ Q(t)\ E\{v(t,t_k)\}\ dt \Bigg) = 0. \quad (23)$$

Introducing again R_k, M_k and Q_k given by (14) and also

$$L_k=\int_{t_k}^{t_{k+1}} x_r^T(t)Q(t)\Phi(t,t_k)dt, \tag{24a}$$

$$T_k=\int_{t_k}^{t_{k+1}} x_r^T(t)Q(t)\Gamma(t,t_k)dt, \tag{24b}$$

$$X_k=\int_{t_k}^{t_{k+1}} x_r^T(t)Q(t)x_r(t)dt, \tag{24c}$$

and given (16),(17) and (23) the equivalent discrete-time tracking criterion J becomes

$$J = E\left(\sum_{k=0}^{N-1} \left(x_k^TQ_kx_k+ 2x_k^TM_ku_k + u_k^TR_ku_k-2L_kx_k-2T_ku_k\right) + x_N^THx_N \right.$$
$$\left. -2x_r^T(t_f)Hx_N\right) + x_r^T(t_f)Hx_r(t_f) + \sum_{k=0}^{N-1} X_k + \gamma_k. \tag{25}$$

The equivalent discrete-time tracking problem is determined by the equivalent discrete-time system (11) and the equivalent discrete-time criterion (25), where the equivalent discrete-time criterion matrices are given by (14),(20) and (24) . Note that the part outside the brackets of the expectation operator in (25) is deterministic and independent of the control. So the minimization of (25), with respect to the control, is equivalent to the minimization of

$$J' = E\left(\sum_{k=0}^{N-1} \left(x_k^TQ_kx_k+ 2x_k^TM_ku_k + u_k^TR_ku_k-2L_kx_k-2T_ku_k\right) + x_N^THx_N \right.$$
$$\left. -2x_r^T(t_f)Hx_N\right). \tag{26}$$

In deriving the solution of the digital optimal tracking problem

we will consider the minimization of (26).

4. Solution to the equivalent discrete-time regulator problem

The derivation of the solution of the equivalent discrete-time regulator problem resembles the one presented by De Koning (1980). He considered randomly sampled linear time-invariant systems. The case of linear time-varying systems and deterministic sampling resembles this situation where the random system matrices now become deterministic.

The conditional mean $\hat{x}_k$ and the covariance P_k of the state x_k are defined as

$$\hat{x}_k = E\{ x_k | Y_{k-1}, U_{k-1} \}, \tag{27}$$

where

$$Y_{k-1} = \{ y_0, y_1, y_2, \cdots, y_{k-1} \}, \tag{28a}$$

$$U_{k-1} = \{ u_0, u_1, u_2, \cdots, u_{k-1} \}, \tag{28b}$$

and

$$P_k = E\{ \tilde{x}_k \tilde{x}_k^T \}, \tag{29a}$$

where

$$\tilde{x}_k = x_k - \hat{x}_k. \tag{29b}$$

It is well known that $\hat{x}_k$ is the best linear estimator of x_k on the basis of Y_{k-1}, U_{k-1}, in the sense that P_k is minimal. It is well known that for the equivalent discrete-time system (11) the estimator is generated by the discrete-time Kalman one steps ahead predictor. In deriving the digital optimal regulator we will need the following facts. If Z is an arbitrary matrix and x_k a stochastic vector then

$$E\{x_k^T Z x_k | Y_{k-1}, U_{k-1}\} = E\{\hat{x}_k^T Z \hat{x}_k\} + E\{\tilde{x}_k^T Z \tilde{x}_k | Y_{k-1}, U_{k-1}\} = \hat{x}_k^T Z \hat{x}_k + tr(ZP_k^C), \quad (30)$$

where the conditional covariance P_k^C is given by

$$P_k^C = E\{\tilde{x}_k^T \tilde{x}_k | Y_{k-1}, U_{k-1}\}. \quad (31)$$

Furthermore if x,y and z are arbitrary stochastic variables then

$$\sigma(y) \supset \sigma(x) \Rightarrow E\{z|x\} = E\{E\{z|y\}|x\}. \quad (32a)$$

where $\sigma(x)$ denotes the σ algebra generated by x. Furthermore if f(x,y,z) is an arbitrary function of x,y and z then

$$E\{E\{f(x,y,z)|x,y\}\} = E\{f(x,y,z)\}. \quad (32b)$$

Finally since v_k is independent of x_i, $k \geq i$ and $\{v_k\}$ is independent of $\{w_k\}$

$$E\{(\Phi_k x_k + \Gamma_k u_k)^T v_k | Y_{k-1}, U_{k-1}\} = 0, \quad (33a)$$

$$E\{ v_k v_k^T | Y_{k-1}, U_{k-1} \} = V_k. \quad (33b)$$

Considering (21) we define the scalar function

$$C_i(Y_{i-1}, U_{i-1}) = \min_{u_i, \ldots, u_{N-1}} E\left\{ \sum_{k=i}^{N-1} \left(x_k^T Q_k x_k + 2x_k^T M_k u_k + u_k^T R_k u_k \right) + x_N^T H x_N \;\middle|\; Y_{i-1}, U_{i-1} \right\}. \quad (34)$$

Under suitable existence conditions for the expectations and the minima (Meier, Larson and Theter, 1971) C_i in (34) satisfies the Bellman equation

$$C_i(Y_{i-1},U_{i-1})=\min_{u_i} E\left\{x_i^TQ_ix_i+2x_i^TM_iu_i+u_i^TR_iu_i+C_{i+1}(Y_i,U_i)\,|\,Y_{i-1},U_{i-1}\right\} \tag{35}$$

with for i=N the initial condition

$$C_N(Y_{N-1},U_{N-1})=\min_{u_N} E\left\{x_N^THx_N\,|\,Y_{N-1},U_{N-1}\right\} = E\left\{x_N^THx_N\,|\,Y_{N-1},U_{N-1}\right\}$$

$$= \hat{x}_N^T H\hat{x}_N+\mathrm{tr}(HP_N^C). \tag{36}$$

Now suppose that $C_i(Y_{i-1},U_{i-1})$ has the form

$$C_i(Y_{i-1},U_{i-1}) = E\left\{ x_i^TS_ix_i\,|\,Y_{i-1},U_{i-1} \right\} + \alpha_i$$

$$= \hat{x}_i^T S_i\hat{x}_i+ \mathrm{tr}\ (S_iP_i^C) + \alpha_i, \tag{37}$$

where $S_i \geq 0$ and deterministic, and S_i and α_i are not functions of U_{i-1}. Considering the boundary condition (36), this is true for i=N if

$$S_N = H, \tag{38a}$$
$$\alpha_N = 0. \tag{38b}$$

Suppose it is true for i+1, i arbitrary, then we must prove that it is true for i. From the Bellman equation (35) we may write

$$C_i(Y_{i-1},U_{i-1})=\min_{u_i} E\left\{x_i^TQ_ix_i+2x_i^TM_iu_i+u_i^TR_iu_i+E\left\{x_{i+1}^TS_{i+1}x_{i+1}\,|\,Y_i,U_i\right\} + \alpha_{i+1}\,|\,Y_{i-1},U_{i-1}\right\}.$$

Since $\sigma(Y_i,U_i) \supset \sigma(Y_{i-1},U_{i-1})$, and given (32a), this becomes

$$C_i(Y_{i-1},U_{i-1})=\min_{u_i} E\left\{x_i^TQ_ix_i+2x_i^TM_iu_i+u_i^TR_iu_i+x_{i+1}^TS_{i+1}x_{i+1}+\right.$$

$$\alpha_{i+1}|Y_{i-1}.U_{i-1}\Big\}.$$

Using (33) and the assumption that S_{i+1} and α_{i+1} are not functions of U_i this may be written as

$$C_i(Y_{i-1},U_{i-1})=\min_{u_i} E\left\{x_i^T(Q_i+\Phi_i^T S_{i+1}\Phi_i)x_i+u_i^T(R_i+\Gamma_i^T S_{i+1}\Gamma_i)u_i+ 2x_i^T(M_i+\Phi_i^T S_{i+1}\Gamma_i)u_i|Y_{i-1},U_{i-1}\right\} + \mathrm{tr}\ (V_i S_{i+1}) + E\{\alpha_{i+1}|Y_{i-1},U_{i-1}\}.$$

From (30) this becomes

$$C_i(Y_{i-1},U_{i-1})= \min_{u_i}\left[\hat{x}_i^T(Q_i + \Phi_i^T S_{i+1}\Phi_i)\hat{x}_i + u_i^T(R_i+\Gamma_i^T S_{i+1}\Gamma_i)u_i + 2\hat{x}_i^T(M_i+\Phi_i^T S_{i+1}\Gamma_i)u_i\right]+\mathrm{tr}\left((Q_i+\Phi_i^T S_{i+1}\Phi_i)P_i^C\right)+\mathrm{tr}(V_i S_{i+1}) +E\{\alpha_{i+1}|Y_{i-1},U_{i-1}\}. \tag{39}$$

The term between the brackets in equation (39) is a quadratic form in $\hat{x}_i$ and u_i. We want to find the u_i that minimizes (39) so the obvious way to complete the square for the term in between the brackets of (39) is

$$C_i(Y_{i-1},U_{i-1})= \min_{u_i}\left[(u_i+K_i\hat{x}_i)^T(R_i+\Gamma_i^T S_{i+1}\Gamma_i)(u_i+K_i\hat{x}_i) +\hat{x}_i^T(Q_i+\Phi_i^T S_{i+1}\Phi_i-K_i^T(R_i+\Gamma_i^T S_{i+1}\Gamma_i)K_i)\hat{x}_i\right] +\mathrm{tr}\left((Q_i+\Phi_i^T S_{i+1}\Phi_i)P_i^C\right)+\mathrm{tr}(V_i S_{i+1})+E\{\alpha_{i+1}|Y_{i-1},U_{i-1}\}, \tag{40}$$

where

$$K_i = (R_i+\Gamma_i^T S_{i+1}\Gamma_i)^{-1}(\Gamma_i^T S_{i+1}\Phi_i+M_i^T). \tag{41}$$

The minimum is attained when

$$u_i = -K_i\hat{x}_i. \tag{42}$$

If P_i^c in (37) is not a function of U_{i-1}, which is true for the discrete-time Kalman one step ahead predictor for the equivalent discrete-time system (11), then $C_i(Y_{i-1},U_{i-1})$ has indeed the form assumed in (37) with

$$S_i = Q_i+\Phi_i^T S_{i+1}\Phi_i-K_i^T(R_i+\Gamma_i^T S_{i+1}\Gamma_i)K_i, \tag{43}$$

$$\alpha_i=\mathrm{tr}\left(K_i^T(R_i+\Gamma_i^T S_{i+1}\Gamma_i)K_i P_i^c\right)+\mathrm{tr}(V_i S_{i+1})+E\{\alpha_{i+1}|Y_{i-1},U_{i-1}\}, \tag{44}$$

where $S_i\geq 0$ and deterministic, and S_i and α_i not functions of U_{i-1}. The fact that $S_i\geq 0$ can be seen by writing (43) in the following form (Van Willigenburg and De Koning, 1990).

$$S_i=(\Phi_i-\Gamma_i K_i)^T S_{i+1}(\Phi_i-\Gamma_i K_i)+(K_i-R_i^{-1}M_i^T)^T R_i(K_i-R_i^{-1}M_i^T)+Q_i-M_i R_i^{-1}M_i^T. \tag{45}$$

From (45) it can be seen that since $R_i\geq 0$, $S_N\geq 0$, and $Q_i-M_i R_i^{-1}M_i^T\geq 0$ (Van Willigenburg and De Koning, 1990), indeed $S_i\geq 0$. The solution of the digital optimal regulator problem is therefore given by (38),(41),..,(44). Given (35), and considering (21), the minimum value of the cost (19) equals

$$J = E\{C_0\} = E\left\{ x_0^T S_0 x_0 \right\} + E\{\alpha_0\} + \sum_{k=0}^{N-1} \gamma_k. \tag{46}$$

Given (37),(43),(44) and (1c) and using (32b) this becomes

$$J=\bar{x}_0^T S_0\bar{x}_0+\mathrm{tr}(S_0 G)+\sum_{k=0}^{N-1}\mathrm{tr}(V_k S_{k+1})+\sum_{k=0}^{N-1}\mathrm{tr}\left(K_i^T(R_i+\Gamma_i^T S_{i+1}\Gamma_i)K_i P_i^c\right)+\sum_{k=0}^{N-1}\gamma_k. \tag{47}$$

The first term on the right side of (47) can be compared to the cost in the deterministic case (Van Willigenburg and De Koning, 1990). The second term on the right is due to uncertainty in the initial state, the third term is caused by disturbances acting on the system, and the fourth by uncertainty in the state estimation. The fifth term on the right, which showed up in deriving the

equivalent discrete-time regulator problem, is also caused by disturbances acting on the system.

Summarizing the solution to the equivalent discrete-time regulator problem is given by

$$K_k = (R_k+\Gamma_k^T S_{k+1}\Gamma_k)^{-1}(\Gamma_k^T S_{k+1}\Phi_k+M_k^T), \tag{48a}$$

$$S_k = Q_k+\Phi_k^T S_{k+1}\Phi_k-K_k^T(R_k+\Gamma_k^T S_{k+1}\Gamma_k)K_k, \qquad S_N=H, \tag{48b}$$

$$u_k = -K_k\hat{x}_k, \tag{48c}$$

$$J=\bar{x}_0^T S_0\bar{x}_0+tr(S_0G)+\sum_{k=0}^{N-1}[tr(V_kS_{k+1})+tr\left(K_k^T(R_k+\Gamma_k^T S_{k+1}\Gamma_k)K_kP_k^c\right)+\gamma_k], \tag{48d}$$

where $\hat{x}_k$ is generated by the discrete-time Kalman one step ahead predictor, for the equivalent discrete-time system (11). Replacing Y_{i-1} by Y_i only affects the state estimator, which is now generated by the Kalman filter in stead of the one step ahead predictor. Finally we remark that clearly, the digital optimal regulator is certainty equivalent.

5. Solution to the equivalent discrete-time tracking problem

Consider the discrete-time tracking criterion (26).

$$J'= E\left(\sum^{N-1}\left(x_k^TQ_kx_k+2x_k^TM_ku_k+u_k^TR_ku_k-2L_kx_k-2T_ku_k\right)+x_N^THx_N-2x_r^T(t_f)Hx_N\right). \tag{49}$$

Like in the regulator case we define the scalar function

$$C_i(Y_{i-1},U_{i-1}) = \min_{u_i,\ldots,u_{N-1}} E\left\{\sum_{k=0}^{N-1}\left(x_k^TQ_kx_k+ 2x_k^TM_ku_k + u_k^TR_ku_k-2L_kx_k\right.\right.$$

$$-2T_k u_k\Big) + x_N^T H x_N - 2x_r^T(t_f) H x_N \,|\, Y_{i-1}, U_{i-1} \Big\}. \tag{50}$$

Again under suitable existence conditions for the expectations and the minima (50) satisfies the Bellman equation

$$C_i(Y_{i-1},U_{i-1}) = \min_{u_i} E\Big\{x_i^T Q_i x_i + 2x_i^T M_i u_i + u_i^T R_i u_i - 2L_i x_i - 2T_i u_i + C_{i+1}(Y_i,U_i) \,|\, Y_{i-1},U_{i-1}\Big\} \tag{51}$$

with for i=N the initial condition

$$C_N(Y_{N-1},U_{N-1}) = \min_{u_N} E\Big\{x_N^T H x_N - 2x_r^T(t_f) H x_N \,|\, Y_{N-1},U_{N-1}\Big\}$$
$$= E\Big\{x_N^T H x_N - 2x_r^T(t_f) H x_N \,|\, Y_{N-1},U_{n-1}\Big\} = \hat{x}_N^T H \hat{x}_N - 2x_r^T(t_f) H \hat{x}_N + tr(HP_N^C). \tag{52}$$

Now suppose , according to the case of the discrete-time tracker presented by Lewis (1986), that $C_i(Y_{i-1},U_{i-1})$ has the form

$$C_i(Y_{i-1},U_{i-1}) = E\Big\{x_i^T S_i x_i - 2x_i^T W_i \,|\, Y_{i-1},U_{i-1}\Big\} + \alpha_i$$
$$= \hat{x}_i^T S_i \hat{x}_i - 2\hat{x}_i^T W_i + tr\,(S_i P_i^C) + \alpha_i, \tag{53}$$

where $S_i \geq 0$, S_i and W_i deterministic, and S_i, W_i and α_i are not functions of U_{i-1}. Given the boundary condition (52) this is true for i=N if

$$S_N = H, \tag{54a}$$
$$W_N = Hx_r(t_f), \tag{54b}$$
$$\alpha_N = 0. \tag{54c}$$

Suppose it is true for i+1, i arbitrary, then we must prove that it is true for i. From the Bellman equation (51) we have

$$C_i(Y_{i-1},U_{i-1})=\min_{u_i} E\Big\{x_i^TQ_ix_i+2x_i^TM_iu_i+u_i^TR_iu_i-2L_ix_i-2T_iu_i$$
$$+ E\Big\{x_{i+1}^TS_{i+1}x_{i+1}-2x_{i+1}^TW_{i+1}|Y_i,U_i\Big\} + \alpha_{i+1}|Y_{i-1},U_{i-1}\Big\}.$$

Since $\sigma(Y_i,U_i) \supset \sigma(Y_{i-1},U_{i-1})$, and given (32a), this becomes

$$C_i(Y_{i-1},U_{i-1})=\min_{u_i} E\Big\{x_i^TQ_ix_i+2x_i^TM_iu_i+u_i^TR_iu_i-2L_ix_i-2T_iu_i$$
$$+x_{i+1}^TS_{i+1}x_{i+1}- 2x_{i+1}^TW_{i+1} + \alpha_{i+1}|Y_{i-1}.U_{i-1}\Big\}.$$

Using (33) and the assumption that S_{i+1}, W_{i+1} and α_{i+1} are not functions of U_i this may be written as

$$C_i(Y_{i-1},U_{i-1})=\min_{u_i} E\Big\{x_i^T(Q_i+\Phi_i^TS_{i+1}\Phi_i)x_i+u_i^T(R_i+\Gamma_i^TS_{i+1}\Gamma_i)u_i+$$
$$2x_i^T(M_i+\Phi_i^TS_{i+1}\Gamma_i)u_i-x_i^T(2\Phi_i^TW_{i+1}+2L_i^T)-u_i^T(2\Gamma_i^TW_{i+1}+2T_i^T)|Y_{i-1},U_{i-1}\Big\}$$
$$+ \operatorname{tr}(V_iS_{i+1}) + E\{\alpha_{i+1}|Y_{i-1},U_{i-1}\}.$$

From (30) this becomes

$$C_i(Y_{i-1},U_{i-1})= \min_{u_i} \Big[\hat{x}_i^T(Q_i + \Phi_i^TS_{i+1}\Phi_i)\hat{x}_i + u_i^T(R_i+\Gamma_i^TS_{i+1}\Gamma_i)u_i +$$
$$2\hat{x}_i^T(M_i+\Phi_i^TS_{i+1}\Gamma_i)u_i-2\hat{x}_i^T(\Phi_i^TW_{i+1}+L_i^T)-2u_i^T(\Gamma_i^TW_{i+1}+T_i^T)\Big]$$
$$\operatorname{tr}\Big((Q_i+\Phi_i^TS_{i+1}\Phi_i)P_i^C\Big)+ \operatorname{tr}(V_iS_{i+1}) + E\{\alpha_{i+1}|Y_{i-1},U_{i-1}\}. \tag{55}$$

The term between the brackets of equation (55) is a quadratic expression in $\hat{x}_i$ and u_i. Since we want to find the u_i that minimizes (55) the obvious way to complete the square for the term in between the brackets of (55) leads to

$$C_i(Y_{i-1},U_{i-1})=$$
$$\min_{u_i} \Big[(u_i+K_i\hat{x}_i-K_i^1W_{i+1}-K_i^2T_i^T)^T(R_i+\Gamma_i^TS_{i+1}\Gamma_i)(u_i+K_i\hat{x}_i-K_i^1W_{i+1}-K_i^2T_i^T)$$
$$+\hat{x}_i^T(Q_i+\Phi_i^TS_{i+1}\Phi_i-K_i^T(R_i+\Gamma_i^TS_{i+1}\Gamma_i)K_i)\hat{x}_i$$

$$-2\hat{x}_i^T(\Phi_i^T W_{i+1}+L_i^T-K_i^T\Gamma_i^T W_{i+1}-K_i^T T_i^T)-2W_{i+1}^T K_i^{1^T} T_i^T-W_{i+1}^T K_i^{1^T}\Gamma_i^T W_{i+1}-T_i K_i^2 T_i^T\Big]$$

$$+\mathrm{tr}\Big((Q_i+\Phi_i^T S_{i+1}\Phi_i)P_i^c\Big)+\mathrm{tr}(V_i S_{i+1}) + E\{\alpha_{i+1}|Y_{i-1},U_{i-1}\} \tag{56}$$

where

$$K_i = (R_i+\Gamma_i^T S_{i+1}\Gamma_i)^{-1}(\Gamma_i^T S_{i+1}\Phi_i+M_i^T), \tag{57a}$$

$$K_i^1 = (R_i+\Gamma_i^T S_{i+1}\Gamma_i)^{-1}\Gamma_i^T, \tag{57b}$$

$$K_i^2 = (R_i+\Gamma_i^T S_{i+1}\Gamma_i)^{-1}. \tag{57c}$$

The minimum is attained when

$$u_i = -K_i\hat{x}_i + K_i^1 W_i + K_i^2 T_i. \tag{58}$$

If P_i^c in (37) is not a function of U_{i-1}, which is true for the discrete-time Kalman one step ahead predictor for the equivalent discrete-time system (11), then $C_i(Y_{i-1},U_{i-1})$ has indeed the form assumed in (53) with

$$S_i = Q_i+\Phi_i^T S_{i+1}\Phi_i-K_i^T(R_i+\Gamma_i^T S_{i+1}\Gamma_i)K_i, \tag{59a}$$

$$W_i = (\Phi_i - \Gamma_i K_i)^T W_{i+1} - K_i^T T_i^T + L_i^T, \tag{59b}$$

$$\alpha_i = -(K_i^1 W_{i+1})^T(2T_i^T+\Gamma_i^T W_{i+1})-T_i K_i^2 T_i^T+\mathrm{tr}\Big(K_i^T(R_i+\Gamma_i^T S_{i+1}\Gamma_i)K_i P_i^c\Big)$$

$$+\mathrm{tr}(V_i S_{i+1}) + E\{\alpha_{i+1}|Y_{i-1},U_{i-1}\}, \tag{59c}$$

where $S_i \geq 0$, S_i and W_i deterministic, and S_i, W_i and α_i are not functions of U_{i-1}. The fact that $S_i \geq 0$ is obvious from the regulator case since the equations that determine the feedback, (57a) and (59a), are exactly the same as in the regulator case. The solution to the digital optimal tracking problem is therefore determined by (57), (58) and (59). Given (53), and considering (26), the cost (25) is given by

$$J = E\{C_0\}+x_r^T(t_f)Hx_r(t_f) + \sum_{i=0}^{N-1} X_i + \gamma_i$$

$$= E\left\{ x_0^T S_0 x_0 - 2x_0^T W_0 \right\} + E\{\alpha_0\} + x_r^T(t_f)Hx_r(t_f) + \sum_{i=0}^{N-1} X_i + \gamma_i \quad (60)$$

which given (54), (59) and (1c), using (32b), becomes

$$J = \bar{x}_0^T S_0 \bar{x}_0 - 2\bar{x}_0^T W_0 + x_r^T(t_f)Hx_r(t_f) + \sum_{i=0}^{N-1} [X_i - (K_i^1 W_{i+1})^T (2T_i^T + \Gamma_i^T W_{i+1}) - T_i K_i^2 T_i^T]$$

$$+ tr(S_0 G) + \sum_{i=0}^{N-1} tr(V_i S_{i+1}) + \sum_{i=0}^{N-1} tr\left(K_k^T (R_k + \Gamma_k^T S_{k+1} \Gamma_k) K_k P_k^c\right) + \sum_{i=0}^{N-1} \gamma_i . \quad (61)$$

The first four terms of equation (61) can be compared to the cost in the deterministic case. The remaining terms also appeared in the regulator case and were classified there.

Summarizing the solution (54), (57),..,(61) to the equivalent discrete-time tracking problem is given by

$$K_k = (R_k + \Gamma_k^T S_{k+1} \Gamma_k)^{-1} (\Gamma_k^T S_{k+1} \Phi_k + M_k^T), \quad (62a)$$

$$K_k^1 = (R_k + \Gamma_k^T S_{k+1} \Gamma_k)^{-1} \Gamma_k^T, \quad (62b)$$

$$K_k^2 = (R_k + \Gamma_k^T S_{k+1} \Gamma_k)^{-1}, \quad (62c)$$

$$u_k = - K_k \hat{x}_k + K_k^1 W_k + K_k^2 T_k, \quad (62d)$$

$$S_k = Q_k + \Phi_k^T S_{k+1} \Phi_k - K_k^T (R_k + \Gamma_k^T S_{k+1} \Gamma_k) K_k, \quad S_N = H, \quad (62e)$$

$$W_k = (\Phi_k - \Gamma_k K_k)^T W_{k+1} - K_k^T T_k^T + L_k^T, \quad W_N = Hx_r(t_f) \quad (62f)$$

$$J=\bar{x}_0^T S_0 \bar{x}_0 - 2\bar{x}_0^T W_0 + x_r^T(t_f) H x_r(t_f) + tr(S_0 G) + \sum_{k=0}^{N-1} \Big[tr\Big(K_k^T (R_k + \Gamma_k^T S_{k+1} \Gamma_k) K_k P_k^c\Big)$$

$$+ tr(V_k S_{k+1}) + X_k + \gamma_k - (K_k^1 W_{k+1})^T (2T_k^T + \Gamma_k^T W_{k+1}) - T_k K_k^2 T_k^T \Big], \qquad (62i)$$

where $\hat{x}_k$ is again generated by the well known discrete-time Kalman one step ahead predictor for the discrete-time system (11). The solution matches the one in the deterministic case (Van Willigenburg and De Koning, 1990). If Y_{i-1} is replaced by Y_i then, as in the regulator $\hat{x}_i$ is generated by the Kalman filter. Clearly also the digital optimal tracker (62) is certainty equivalent.

6. Conclusions

Generally digital control problems are approximated by discrete-time control problems. In this paper we considered "true" digital control problems, i.e. without making any approximations. Using stochastic dynamic programming, we have derived the digital optimal regulator and tracker for linear time-varying systems disturbed by additive white noise, where the state information at the sampling instants is incomplete and corrupted by additive white noise. Both problems appear to be certainty equivalent so the result equals the deterministic digital optimal regulator and tracker (Van Willigenburg and De Koning, 1990) where the state is replaced by its estimate generated by the discrete-time Kalman one step ahead predictor. The derivations in this paper were fundamentally different from the ones presented in the deterministic case. Expressions for the cost of both the digital optimal regulator and tracker have been derived, which are explicit in the system, criterion, and covariance matrices. In the deterministic case only an expression for the regulator cost was presented. The numerical computation of the digital regulator and tracker, which is not straightforward, is treated in a companion paper (Van Willigenburg 1990). It is believed that the digital optimal regulator result permits for the first time the design and computation of a digital optimal perturbation controller for non linear systems that have to track reference trajectories, e.g. a

robot performing a prescribed motion or a fermentation batch process. The linearized dynamics about the trajectory constitute a time-varying system.

The digital optimal tracker has never been considered in the literature. This is remarkable since it can be applied in all situations were a linear system, controlled by a digital computer, has to track a reference trajectory, e.g. a cartesian type robot performing a prescribed motion.

References

ACKERMANN J., 1985, Sampled data control-systems, Springer Verlag.

ASTROM K.J., WITTENMARK B., 1984, Computer controlled systems, Englewood Cliffs, NJ: Prentice Hall

FRANKLIN, G.F., POWELL D., Digital control of dynamic systems, Addison and Wesley.

HALYO N., CAGLAYAN A.K., 1976, 'A seperation theorem for the stochastic sampled-data LQG problem', Int. J. Contr., 23, 237-244.

DE KONING W.L., 1980a, 'Equivalent discrete optimal control problem for randomly sampled digital control systems', Int.J.Sys.Sci., 11, 841-855.

DE KONING W.L., 1980b, 'On the optimal control of randomly sampled linear stochastic systems', Proc. IFAC Symp. CAD Control Syst., 107-112.

MEIER L., LARSON R.E., THETER A.J., 'Dynamic programming for stochastic control of discrete systems', IEEE Trans. Aut. Contr., 16, 767-775.

LEVIS A.H., SCHLUETER R.A., ATHANS M., 1971, 'On the behavior of optimal linear sampled data regulators', Int. J. Contr., 13, 343-361.

LEWIS F.L., 1986, Optimal Control, Wiley.

VAN WILLIGENBURG L.G., DE KONING W.L., 1990, 'The digital optimal regulator and tracker for deterministic time-varying systems', submitted for publication.

VAN WILLIGENBURG L.G., 1990, 'Numerical procedures to compute the digital optimal regulator and tracker for time-varying systems',

submitted for publication.

L.G. VAN WILLIGENBURG

NUMERICAL PROCEDURES TO COMPUTE THE DIGITAL OPTIMAL REGULATOR AND TRACKER FOR TIME VARYING SYSTEMS

Abstract

Two numerical procedures to compute the digital optimal regulator and tracker for linear time-varying systems are presented. They are based on two different solutions of the digital optimal regulator and tracking problem, one based on static, the other on dynamic optimization. For several examples it is shown that numerical solutions, obtained from both procedures, are identical. Finally it is demonstrated that the numerical procedure based on dynamic optimization is superior with respect to accuracy, computation time and the use of computer memory.

Keywords digital optimal control, regulator, tracker, linear time-varying systems, numerical procedures.

1. Introduction

Although in many practical situations we are faced with a continuous-time plant, controlled by a computer, usual controller designs never take into account the inter-sample behavior. It is common practice to *approximate* digital control problems by discrete-time problems (Ackermann, 1985). Two main disadvantages of this approach should be mentioned. The sampling time has to be chosen small enough to properly approximate the continuous-time system behavior. For instance in the case of robot control, where the computational burden on the computer is high, this presents a serious limitation. Furthermore a discrete-time criterion has to be searched for, which leads to a satisfactory continuous-time behavior. Both the choice of this criterion and the choice of the sampling time are often reported to be a problem (Franklin and Powell, 1980, Astrom and Wittenmark, 1984). Van Willigenburg and De Koning (1990a,b) solved true digital control problems, i.e.